AIR SWITCH KIT

ACTION: AIR SWITCH KIT

RANGE: AIR SWITCH KITS

An Air Switch Kit with cast metal detailing to match your Buster + Punch Kitchen Faucet. Use it to activate your garbage disposal unit. Available in steel, brass, gun metal and welders black finishes, it combines seamlessly with our Faucet Mixer collection and Air Gap Kit to complete your B+P kitchen. The Buster + Punch Air Switch Kit includes everything you need to install and operate the switch. A dual outlet adapter is also included for extra convenience.





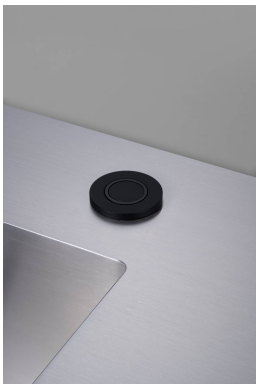



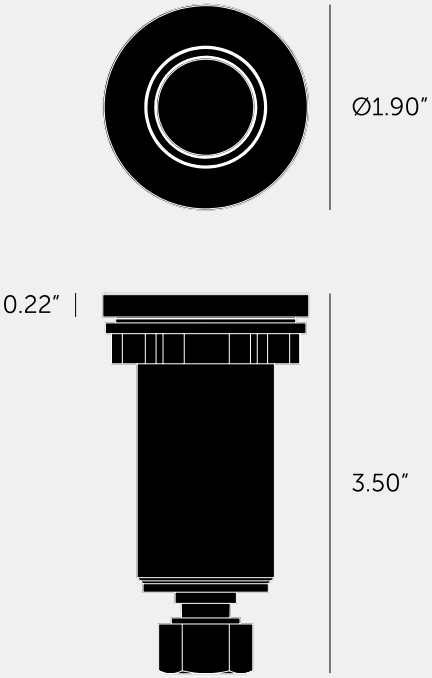

SPECIFICATIONS

A dual socket adapter is included along with cast metal detailed push button for a complete set. Designed for USA and Canada. Suitable for interior only.
Maximum thickness of counter top is 1-15/16".
Required hole diameter is 1-3/8" D.

INCLUDED

1 x Air Switch
1 x Dual Outlet Adapter
1 x Flexible Pipe
1 x Instructions Manual
1 x Fixing Kit

PLEASE NOTE

DISCLAIMER: Always consult a trade professional when installing this component. Buster + Punch is not responsible for the usage or feasibility of installation requirements.

FINISH & SKU NUMBERS

sku:	finish:	size:
NKT-054057	brass	
NKT-354059	gun metal	
NKT-074058	steel	
NKT-024060	welders black	

CARE INSTRUCTIONS

Wipe with damp cloth with no loose hairs, avoid using any chemicals. All finishes are prone to aging.