MIRROR / CAST

ACTION: MIRROR

KNURL: CAST

RANGE: MIRROR

A mirror featuring our signature rough-cast knuckle, hand polished metal bar and circular mirror. The mirror can be tilted by hand to adjust to your height. Thanks to the casting process, each knuckle is one-of-a-kind. Suitable for all interior spaces, including bathrooms.









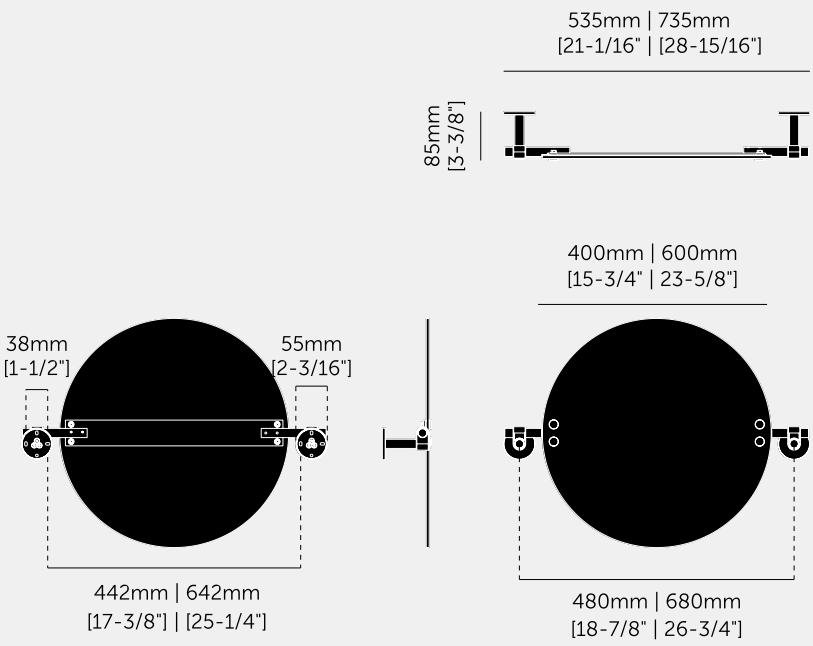

SPECIFICATIONS

A round mirror with tilting action. Made from a solid metal bar and cast knuckles, and refined by hand.

The mirror tilts on its axis to adjust to the viewers height.

Made from 304 stainless steel and coated with durable finishes that make it suitable for bathroom use.

Available in small (400mm / 15.7 inches) and large (600mm / 23.6 inches) mirror sizes.

The knuckles are mounted on 53mm diameter roses with 38mm fixing centres; front-fixed using M4 countersunk screws, 20mm long.

FINISH & SKU NUMBERS

sku:	finish:	size:
UMRG-054338	brass	400MM / 15.7 INCHES
UMRG-454668	smoked bronze	400MM / 15.7 INCHES
UMRG-074339	steel	400MM / 15.7 INCHES
UMRG-484340	welders black	400MM / 15.7 INCHES
UMRG-054344	brass	600MM / 23.6 INCHES
UMRG-454669	smoked bronze	600MM / 23.6 INCHES
UMRG-074345	steel	600MM / 23.6 INCHES
UMRG-484346	welders black	600MM / 23.6 INCHES

INCLUDED

1 x mirror
1 x Left hand side mirror knuckle
1 x Right hand side mirror knuckle
4 x M4x10 countersunk cross recess screws
4 x M5 washers
4 x M5 nut
4 x OD=16, M5x9 mirror bolts
1 x 53mm inner rose cover and washer
4 x M4x20mm countersunk woodscrews
4 x 30mmx4mm wall plugs

PLEASE NOTE

DISCLAIMER: Always consult a trade professional when installing this product. Buster + Punch is not responsible for the usage or feasibility of installation requirements.

CARE INSTRUCTIONS

Clean regularly with a soft, dry cloth or duster. Wash periodically using a soft cloth and mild soapy water then dry immediately with a clean, soft cloth. Rubbing or wiping should be carried out in the direction of the polish lines, not across them. DO NOT use oily rags or greasy cloths when wiping the product surface.