EXHAUST BULB / GU10 / PACK OF 3

ACTION: BULB

RANGE: LIGHT BULBS

7W GU10 LED BULB x 3
110-120V / 600 Lumen
Dimmable 3000K
CRI 80 / 36D Beam





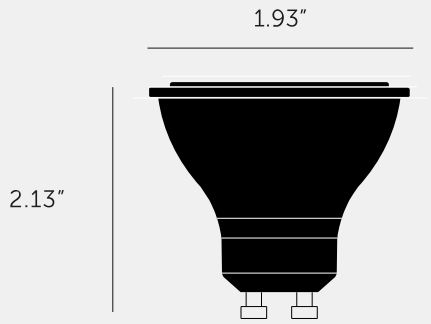

SPECIFICATIONS

7W GU10 LED BULB x 3

110-120V

600 Lumen

Dimmable / 3000K

CRI 80 / 36D Beam

FINISH & SKU NUMBERS

sku:	finish:	size:
NEB-01832	white	

INCLUDED

7W GU10 LED BULB x 3

PLEASE NOTE

DISCLAIMER: Always consult a trade professional when installing this product. Buster + Punch is not responsible for the usage or feasibility of installation requirements. This product is not suitable for damp or wet environments.

CARE INSTRUCTIONS

Wipe with lint-free cloth with no loose hairs, avoid using any chemicals. Please note all finishes are prone to aging.