TOGGLE MODULE / STANDARD

ACTION: TOGGLE MODULE

KNURL: N/A

RANGE: ELECTRICITY MODULES

Style: On / Off Toggle Switch
Input: 120 - 277VAC / 60Hz
Load: 15A
Switching: single circuit or 3-way circuits

This toggle module is compatible with our detail kits. Toggle modules from other suppliers are not compatible with our detail kits



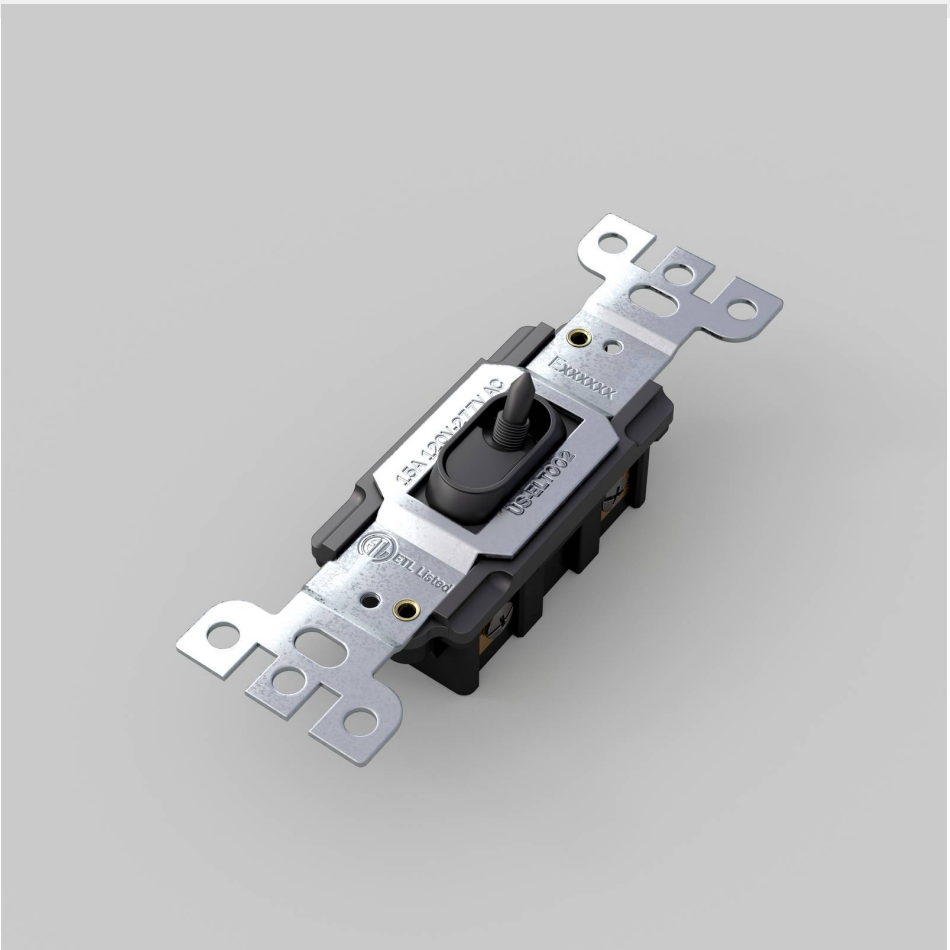

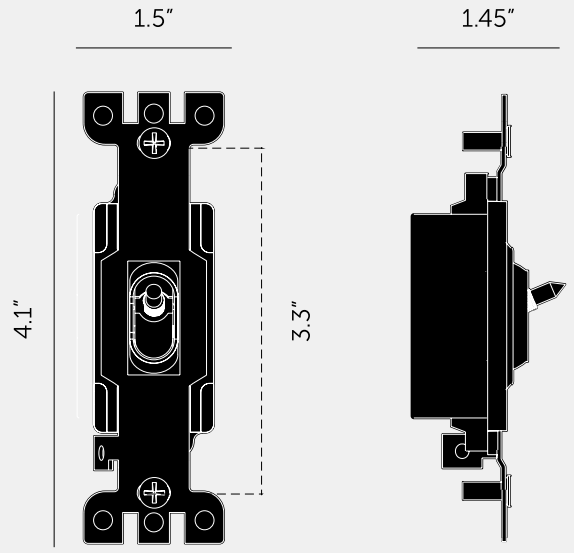

SPECIFICATIONS

Style: On / Off Toggle Switch
Input: 120 - 277VAC / 60Hz
Load: 15A
Switching: 3 way (max 2 per circuit)
Certification: cETLus 5005703
Compatiblity: 3-Way & 4-way switches.
Not compatible with retractive switches, motors, fans or other inductive loads.
Testing Includes:
Overload - 125 cycles @ 150% max load
Endurance - 10,000 cycles @ 100% max load
Dielectric Voltage Withstand - 1500V

FINISH & SKU NUMBERS

sku:	finish:	size:
NTM-01384	● black	

INCLUDED

1 x Toggle Module

PLEASE NOTE

DISCLAIMER: Always consult a trade professional when installing this product. Buster + Punch is not responsible for the usage or feasibility of installation requirements. This product is not suitable for damp or wet environments.

CARE INSTRUCTIONS

Wipe with a dry lint free cloth with no loose hairs, avoid using any chemicals. Please note that finishes may age naturally with time and regular use.