2G PLATE / WITH LOGO

ACTION: ELECTRICITY WALL PLATE

RANGE: WALL PLATES

Decorative cover plate sets in a variety of quality finishes, complete with flush fitting infills. Designed to be completed with range of module inserts to suit a broad spectrum of requirements for lighting control, power supply and device charging. Always finish with our signature details kit & coin screws.

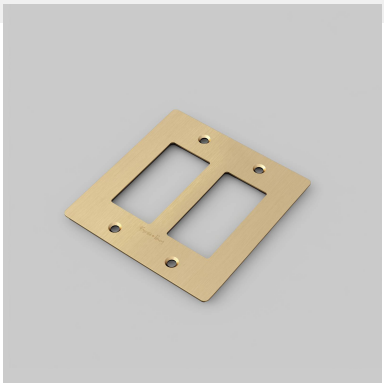

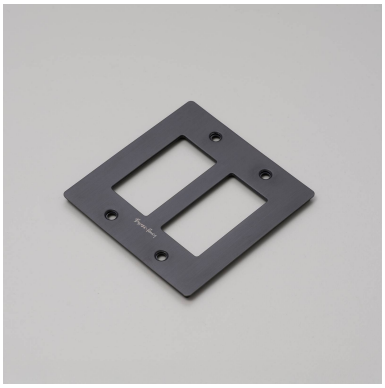

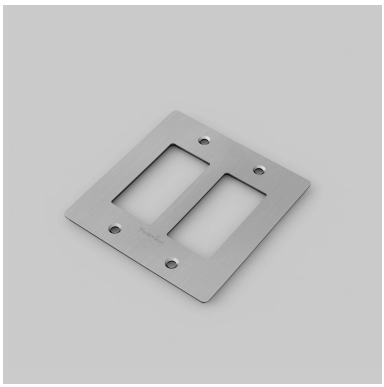



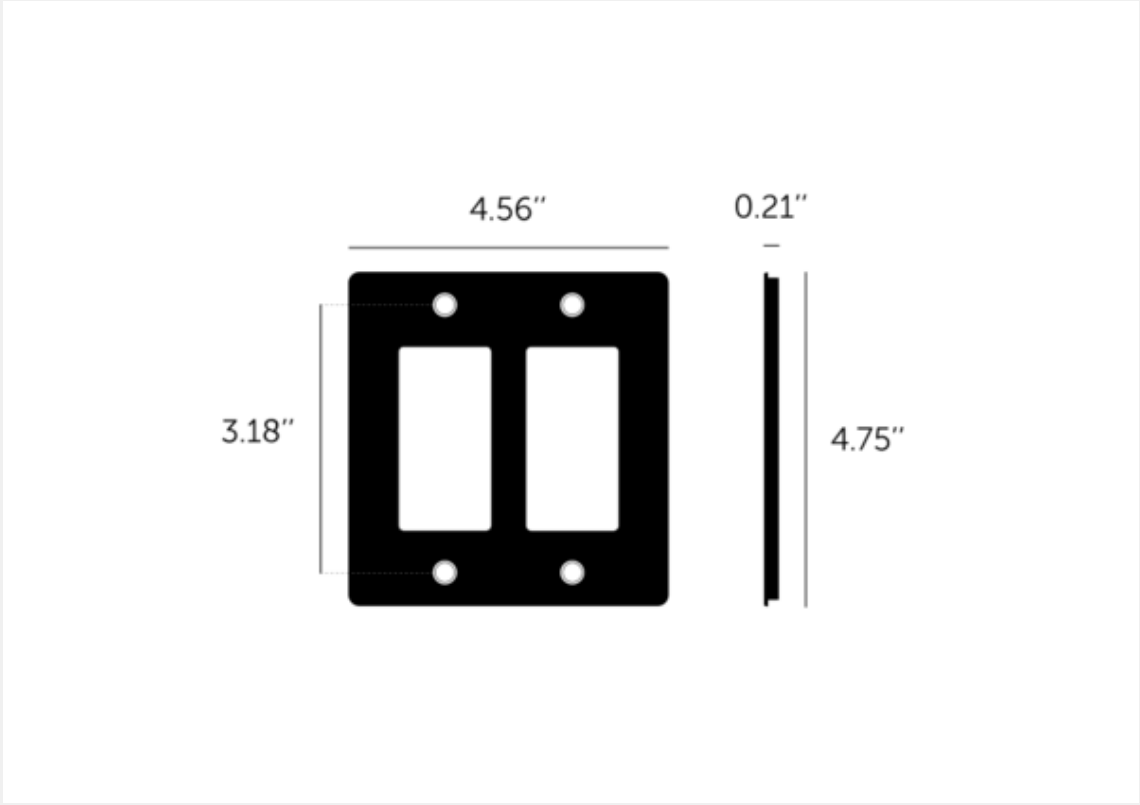

SPECIFICATIONS

Our Metal Electricity range has solid stainless steel plates, in our signature white, steel, brass, smoked bronze and black finishes.
Style: 2G metal plate + infills.
For use with class 1 modules only / Must be grounded.
Recommended Electrical Back Box:
Standard 2G electrical box. See dimensions of chosen modules for required back box depth. Box must be flush mounted.
This piece features a 1/8" (4mm) shadow gap when installed.

FINISH & SKU NUMBERS

sku:	finish:	size:
NPL-023063	black	2G
NPL-05294	brass	2G
NPL-09296	smoked bronze	2G
NPL-07297	steel	2G
NPL-143064	white	2G

INCLUDED

1 x 2G Wall Plate
2 x Toggle Infills
2 x Dimmer Infills
4 x Plate Fixing Screws

PLEASE NOTE

DISCLAIMER: Always consult a trade professional when installing this product. Buster + Punch is not responsible for the usage or feasibility of installation requirements. This product is not suitable for damp or wet environments.

CARE INSTRUCTIONS

Wipe with a dry lint free cloth with no loose hairs, avoid using any chemicals. Please note that finishes may age naturally with time and regular use.