EXHAUST SPOT / CROSS / GRAPHITE

ACTION: SPOTLIGHT

KNURL: CROSS

RANGE: SPOTLIGHTS

An adjustable spotlight with a powder coated metal body and solid metal detailing. The spotlight features our signature cross-knurl baffle and machined coin screws, both made from solid metal. The baffle captures light and creates a delicate metallic glow, whilst a honeycomb filter emits a precise, non-glare, directional spotlight. This spotlight fits a GU10 bulb, sold separately.









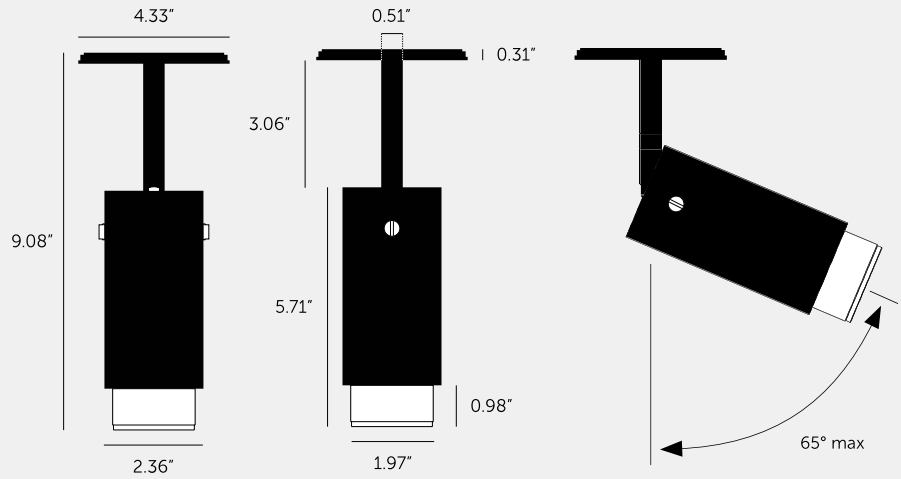

SPECIFICATIONS

Adjustable spotlight
GU10* / 110-120VAC / Dry locations
Max 1 x 9W LED GU10 bulb
*Bulb sold separately
cULus certified / Class 1

INCLUDED

1 x Exhaust Spot Body
1x Exhaust Detail Kit
1 x Honeycomb Filter
1 x Ceiling rose extender
*
* The following come in separate boxes:
1 x Baffle*
2 x Torx Screws*

PLEASE NOTE

DISCLAIMER: Always consult a trade professional when installing this Exhaust Spotlight. Buster + Punch is not responsible for the usage or feasibility of installation requirements. This product is not suitable for damp or wet environments.

FINISH & SKU NUMBERS

sku:	finish:	size:
NEIG-943973	black	
NEIG-183974	brass	
NEIG-613975	smoked bronze	
NEIG-193976	steel	

CARE INSTRUCTIONS

Wipe with lint-free cloth with no loose hairs, avoid using any chemicals. Please note all finishes are prone to aging.