TOULOUSE

504-01-VB

CORBETT

Drawing influence from the modernist era, Toulouse features sleek LED tubes surrounded by stacked oval-shaped glass orbs. The moody light bronze glass shades create bubble-like stacks, separated by Vintage Brass cuffs. Available as a sconce and a chandelier in two sizes, Toulouse is perfect for those who appreciate maximalist style with a contemporary twist.

FINISHES

VINTAGE BRASS



DIMENSIONS / SPECS

Height: 24.5"
Width/Diameter: 7"
Canopy/Backplate: 4.75"
Product Weight: 7.5lb
Extension: 8.25"
Top to Center: 5.25"
Canopy/Backplate Shape: Rectangle
Sloped Ceiling Compatible: No
Living Finish: Yes
Uplight Only: Yes

Shade 1: Glass
Shade 1 Finish: Light Bronze
Shade 1 Top Width: 7"
Shade 1 Height: 4.25"
Shade 2: Glass
Shade 2 Finish: Opal Glossy
Shade 2 Top Width: 1.75"
Shade 2 Height: 20.75"

ELECTRICAL

Bulb 1
Bulb Included: N/A
Socket: Integrated LED
Bulb Type: LED
Max Wattage: 12
Bulb Quantity: 1
Wire Length: 7"
Cord Type: B & W TEFLON W/ GROUND WIRE
Dimmer Type: TRIAC Dimmable
Gem Box Required (2"x3"): No
Dark Sky: No
Convertible: No
CRI: 90
Color Temp.: 2700k
Lumens: 525
Title 24: No
Field Serviceable: Yes
Voltage: 120V

Voltage:
UL Rating: cETL Damp
Gem Box: Not Required

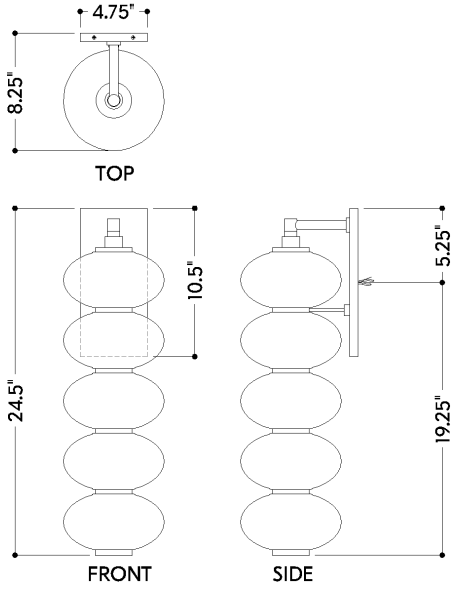

SHIPPING

Carton 1: 25" x 18" x 13"
Carton 1 Weight: 18lb
Shipping Method: Ground
Country of Origin: VN