CRYST RAMA
1988

95 Cantiague Rock Road, Westbury NY 11590
ph:516.931.9090 fax: 516.931.1254
info@crystorama.com • www.crystorama.com

MODEL#: 5761-BU-CL
ASSEMBLY AND DRESSING INSTRUCTIONS



All electrical components must be installed by a licensed electrician in accordance with the National Electric Code and the appropriate local electrical codes.



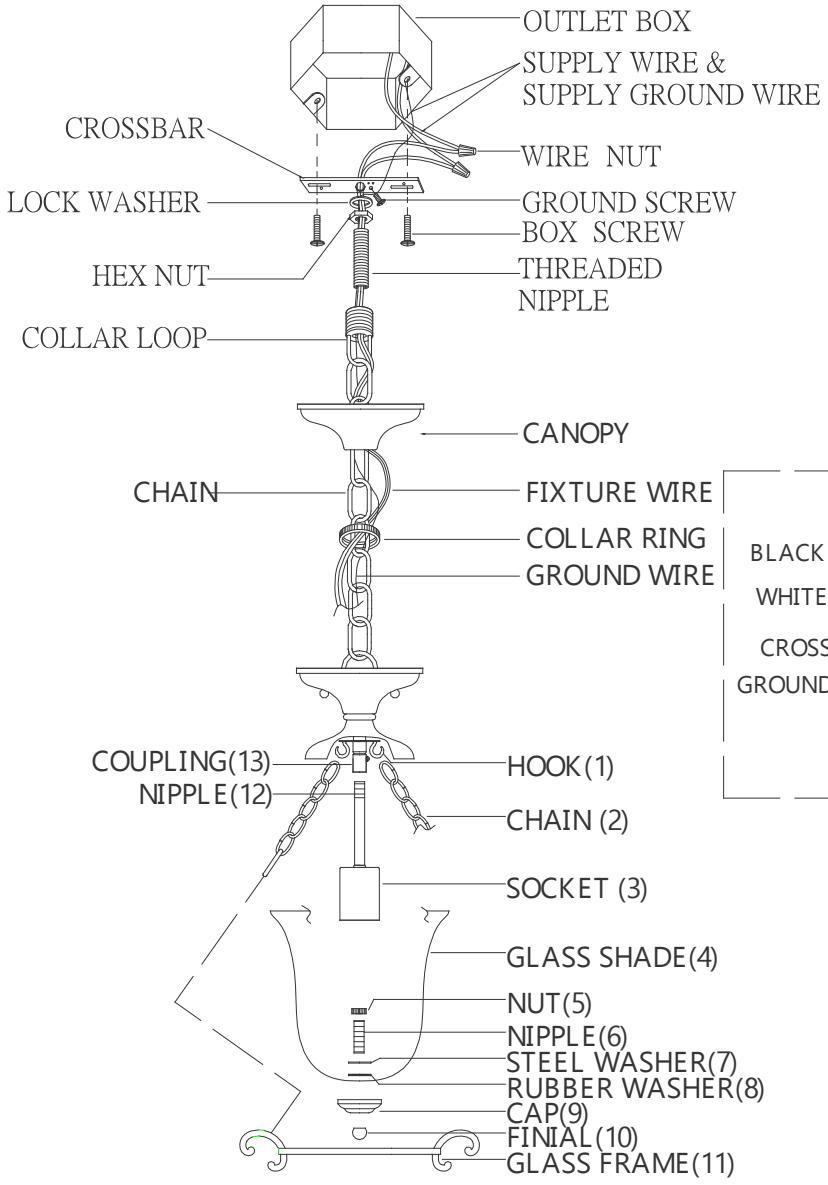

CHANDELIER

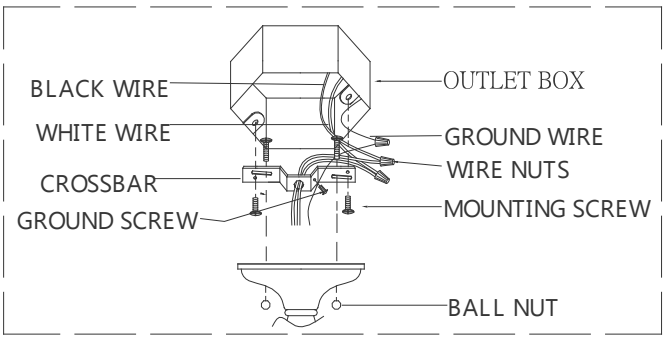

SEMI FLUSH

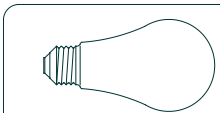

You will need 27-cand.Bulb
60 Watts Reccmmended
100 Watts Max
Bulb not included

FIXTURE ASSEMBLY, MOUNTING, AND WIRING INSTRUCTIONS:

1. Carefully remove the fixture out of the carton and check that all parts are included, referring to the above illustration. Make sure that the electricity is turned off.

When install semi flush:

1. Thread 2 Mounting screws properly into the relevant mounting holes pre-drilled on the Cross bar;
2. Attach the Cross bar to outlet box using 2 Outlet box screws upwards;
3. Make wire connections:

----Attach ground wire to house ground wire using a wire nut
(or attach them to the cross bar with a green ground screw).
----Attach ribbed wire from light to white wire from power
source with a wire nut.
----Attach smooth wire from light to black wire from power
source with a wire nut.

4. Tuck the wire connection neatly into the outlet box;
5. Attach the fixture body to the ceiling and let the 2 mounting screws protrude through the 2 pre-drilled keyholes on the Canopy, and fix it in place by Ball nuts;
6. Turn power on at fuse or circuit box.

When install chandelier:

1. Split the conductors of the fixture wire about 4 inches but be careful not to expose any of the wire inside of the insulation.
2. Connect the fixture ground wire to the outlet box ground wire using the wire nut. Connect the outlet box ground wire to the crossbar with the green hex-head ground screw to pre-tapped hole in the crossbar marked “GND”.
3. Connect the half of the fixture wire that is white, marked, or has a ribbed surface, to the outlet box supply wire (WHITE). Connect the other half of the fixture wire that is black, unmarked, or has a smooth surface, to the outlet box supply wire (BLACK or RED). Use wire nut provided.
4. Spread the electrical splices so that the black wire is on one side of the outlet box and the white wire is on the other side.
5. Slide the canopy up into place against the ceiling. Slide the collar ring up and thread it onto the collar loop to secure the canopy in place.

When install the fixture :

1. Thread nipple(12)into coupling(13);
2. Thread nipple(6)into nut(5),then install steel washer(7), rubber washer(8),glass shade(4), cap(9)onto nipple(5), and secure it with finial(10);
3. Install body onto glass frame(11);

4. install the chain(2) onto hook(1)&glass frame(11);
5. The fixture is ready for lamping and installation!