VISUAL COMFORT & CO.

FAN COLLECTION

3SLNSM52XXXD Series Fan

CUL Model NO. : 3SLNSM52XXXD

Total fan weight with light: 5.1 kg/11.22 lbs

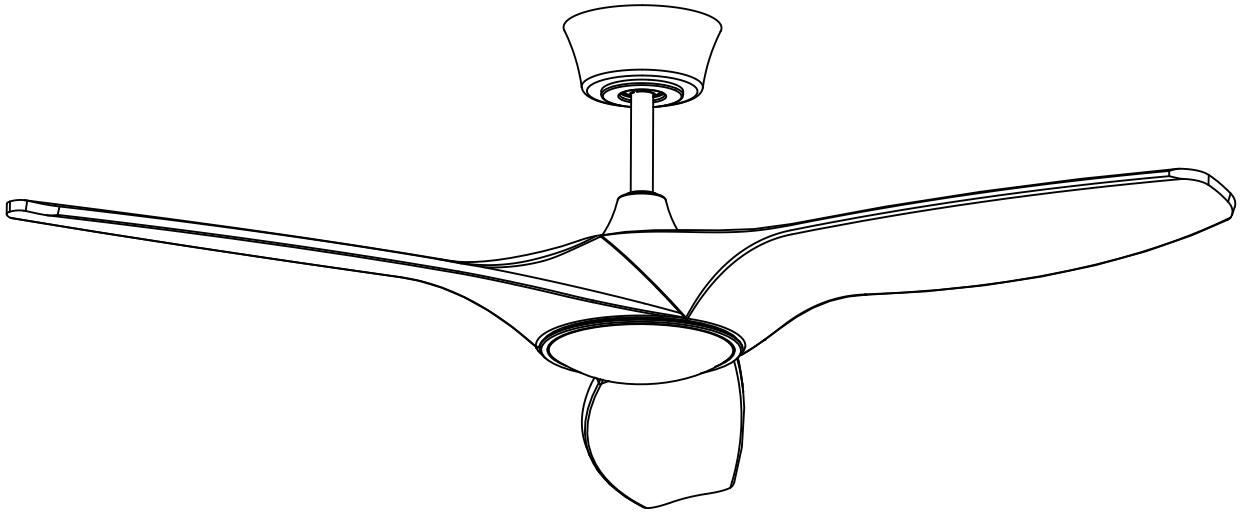

© 2026 Visual Comfort & Co.. All rights reserved. The Visual Comfort & Co. logo is a registered trademark of Visual Comfort & Co.

Visual Comfort & Co. reserves the right to change specifications for product improvements without notification.

VISUAL COMFORT & CO.

www.visualcomfort.com

Cautions and Warnings

WARNING: TO REDUCE THE RISK OF FIRE, ELECTRIC SHOCK, OR INJURY TO PERSONS, OBSERVE THE FOLLOWING
READ AND SAVE THESE INSTRUCTIONS

Installation work and electrical wiring must be done by qualified person(s) in accordance with applicable codes and standards (ANSI/NFPA 70), including fire-rated construction.

Use this unit only in the manner intended by the manufacturer. If you have any questions, contact the manufacturer.

After making the wire connections, the wires should be spread apart with the grounded conductor and the equipment-grounding conductor on one side of the outlet box and ungrounded conductor on the other side of the outlet box. The splices, after being made, should be turned upward and pushed carefully up into the outlet box.

WARNING: Before you begin installing, servicing or cleaning the fan unit, switch the power off at the service panel and lock the service panel to prevent the power from being switched back on accidentally. If the service panel cannot be locked to prevent the power from being switched on accidentally, securely fasten a warning sign to the service panel.

Be cautious! Read all instructions and safety information before installing your new fan. Review the accompanying assembly diagrams.

When cutting or drilling into wall or ceiling, do not damage electrical wiring and other hidden utilities.

Make sure the installation site you choose allows the fan blades to rotate without any obstructions. Allow a minimum clearance of 7 feet from the floor to the trailing edge of the blade.

WARNING: To reduce the risk of fire, electric shock, or personal injury, mount to outlet box marked “Acceptable for Fan Support of 15.9 kg (35 lbs) or less” and use mounting screws provided with the outlet box.

CAUTION: Comply with local codes and regulations. If installing the secondary support safety cable in the U.S., do not remove knockouts in the outlet box. Mount the secondary support safety cable through the reserved nail/screw hole on the outlet box to the building structure or the ceiling joist.

WARNING: To reduce the risk of personal injury, do not bend blade holders during installation to motor, balancing or during cleaning. Do not insert foreign object between rotating blades.

Attach the mounting bracket using only the hardware supplied with the outlet box.

WARNING: To reduce the risk of fire or electric shock, this fan should only be used with fan speed control part no. MRDC06S2H-EO manufactured by Satellite Electronic (Zhongshan) Ltd.

WARNING: To reduce the risk of fire or electric shock, do not use this fan with any other solid state fan speed control device, or variable speed control.

If this unit is to be installed over a tub or shower, it must be marked as appropriate for the application.

Never place a switch where it can be reached from a tub or shower.

The combustion airflow needed for safe operation of fuel-burning equipment may be affected by this unit’s operation. Follow the heating equipment manufacturer’s guideline safety standards such as those published by the National Fire Protection Association (NFPA), and the American Society for Heating, Refrigeration and Air Conditioning Engineers (ASHRAE) and the local code authorities.

CAUTION: To reduce the risk of electric shock, disconnect the electrical supply circuit to the fan before installing the light kit.

CAUTION: The light source is designed for this specific application and can overheat if serviced by untrained personnel. If any servicing is required, the product should be returned to an authorized service facility for examination or repair.

WARNING: If unusual oscillating movement is observed, immediately stop using the ceiling fan and contact the manufacturer, its service agent or suitably qualified persons.

CAUTION: The replacement of parts of the safety suspension system device shall be performed by the manufacturer, its service agent or suitably qualified persons.

CAUTION: The mounting of the suspension system shall be performed by the manufacturer, its service agent or suitably qualified persons.

WARNING: To reduce the risk of fire, electric shock or injury to persons, do not use replacement parts that have not been recommended by the manufacturer (e.g. parts made at home using a 3D printer).

Note: The appliance is not to be used by persons (including children) with reduced physical, sensory or mental capabilities, or lack of experience and knowledge, unless they have been given supervision or instruction. Children should be supervised to ensure that they do not play with the appliance.

All set screws must be checked and tightened where necessary before installation.

Note: Suitable for use in damp locations. Install the fan under covered or enclosed patios or porches. Use only with light kits marked “Suitable for use in damp locations”.

Tools Required for Assembly (not included): Electrical Tape, Phillips Screwdriver, Pliers, Safety Glasses, Stepladder and Wire Strippers

Customer Service
800-969-3347

Customer Service Center
7400 Linder Ave.
Skokie, IL 60077
www.visualcomfort.com

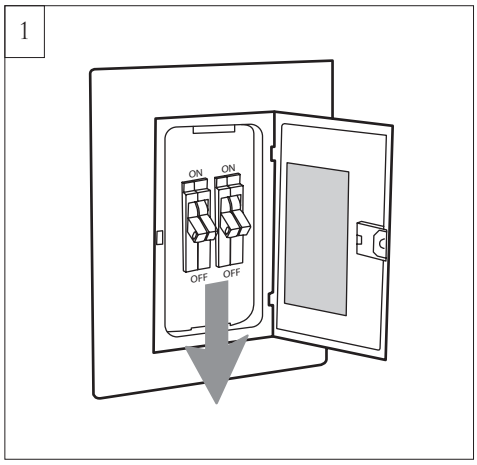

Before you begin installing the fan, Switch power off at Service panel and lock service disconnecting means to prevent power from being switched on accidentally. When the service disconnecting means cannot be locked, securely fasten a warning device, such as a tag, to the service panel.
Use AC 120V/60HZ power supply only.

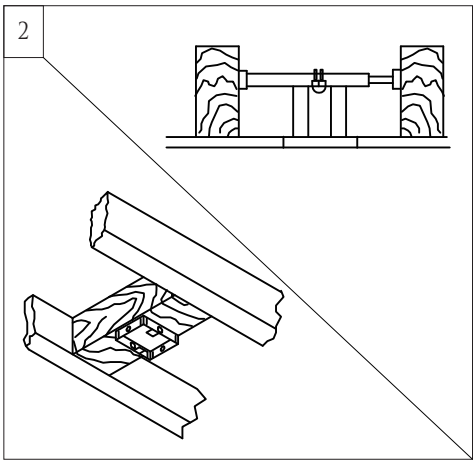

Before installing this fan make sure the outlet box is properly installed to the house structure. To reduce the risk of fire, electric shock, or personal injury, mount to outlet box or supporting system acceptable for fan support.
(Mounting must support at least 35 lbs.)

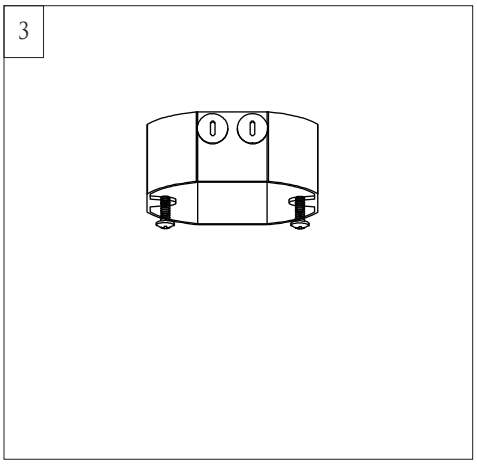

Use metal outlet box suitable for fan support and use only the screws provided with the outlet box (must support 35 lbs). Before attaching fan to outlet box, ensure the outlet box is securely fastened by at least two points to a structural ceiling member (a loose box will cause the fan to wobble).

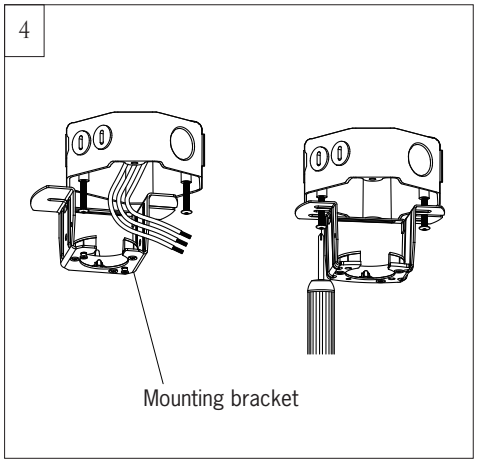

Install the mounting bracket onto the outlet box.
Partially loosen the two screws on the outlet box, attach the mounting bracket onto the outlet box by sliding it over the two screws as shown in the illustration. Have the mounting bracket in position and tighten the set screws.

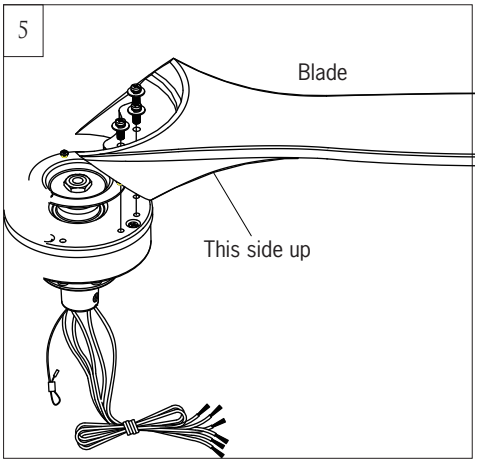

Install a blade onto the motor. Align the holes on blade and the screw holes on the motor as shown in illustration, and then install the set screws with washer provided. Repeat this process for remaining blades.
Tighten all set screws securely.
Note: Make sure the side with a label "This side up" is installed **downward**.

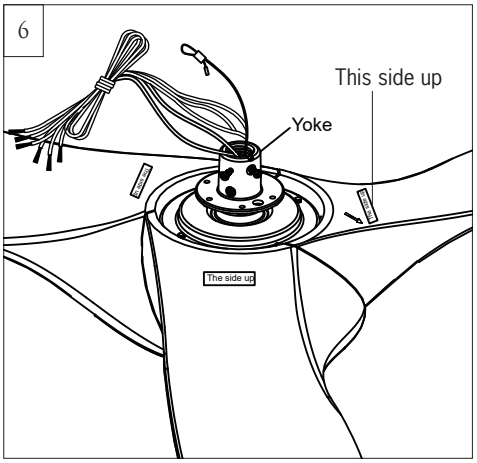

Flip the motor and blade assembly over. The side with a label "This side up" is upward now.

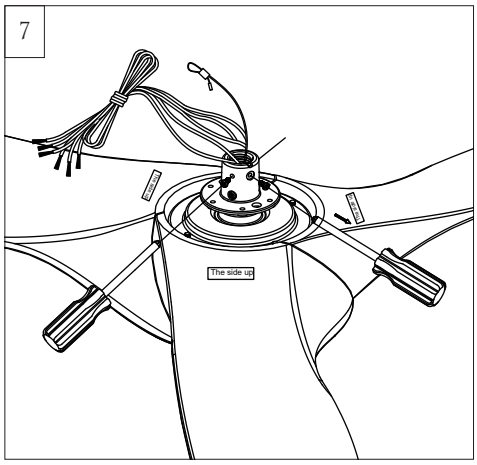

Remove downrod set screws from the yoke on top of motor assembly. Keep the screws.

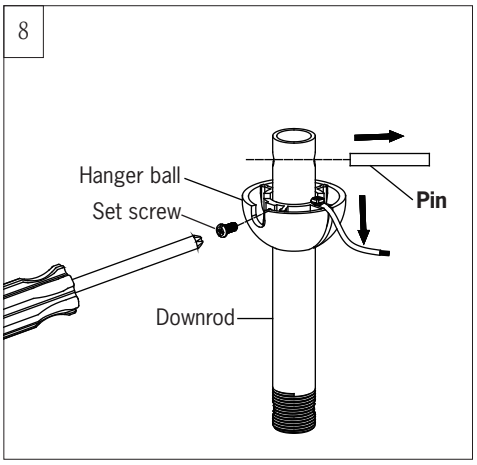

Remove hanger ball from downrod by loosing the set screw and removing the pin as shown in illustration. Keep parts.

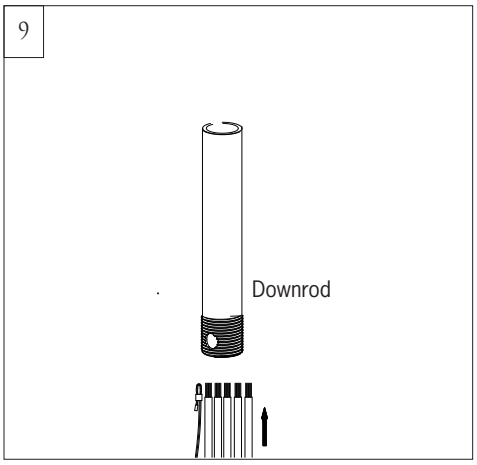

Thread lead wires and safety cable from motor assembly through downrod.

Note: If install an extension downrod (it is not provided) on the fan. Refer to the next installation step and align the hole on extension downrod with the groove on the yoke. Adjust a little to level a large hole on downrod at the countersunk hole on the yoke may be necessary.

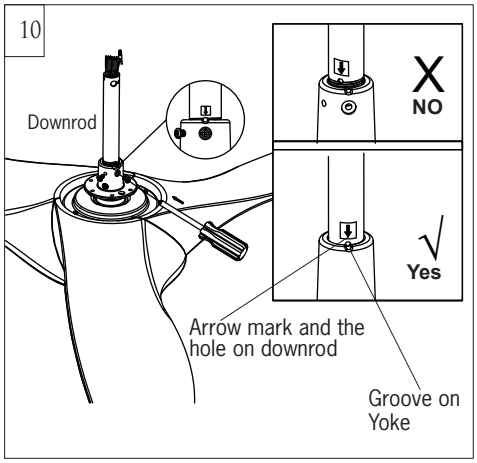

Spin the downrod into the yoke on top of fan until the hole with the arrow mark on downrod is close and aligned with the groove on top edge of the yoke, and then reinstall the screws securely.
Warning: The set screw in the countersunk hole must fit through the wall of the downrod. The screw head should be recessed (or partial recessed) in the countersunk hole.
Caution: To avoid damaging lead wires from downrod installation, make sure the lead wires and safety cable are not twisted when installing the downrod.

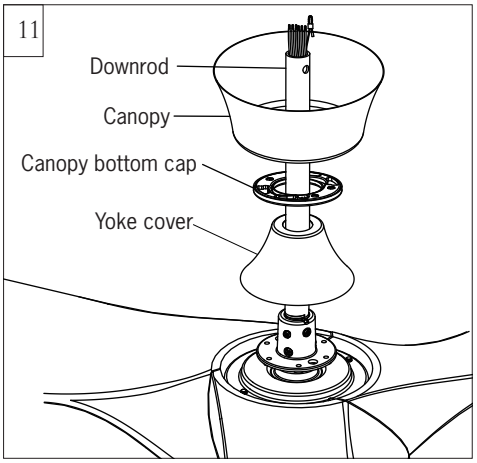

Place yoke cover, canopy bottom cap and canopy over lead wires, safety cable and downrod.

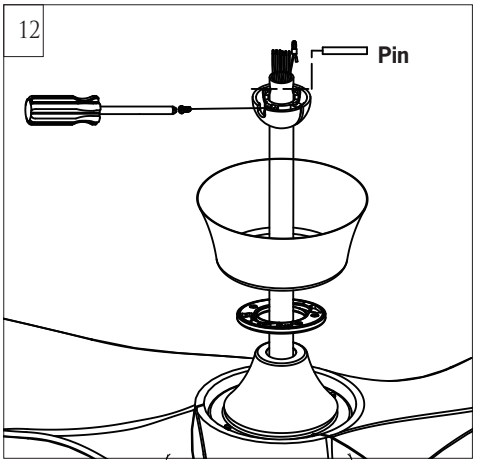

Replace the hanger ball with pin and set screw. Tighten it securely.
Warning: Make sure the **pin** is installed well on hanger ball with downrod.

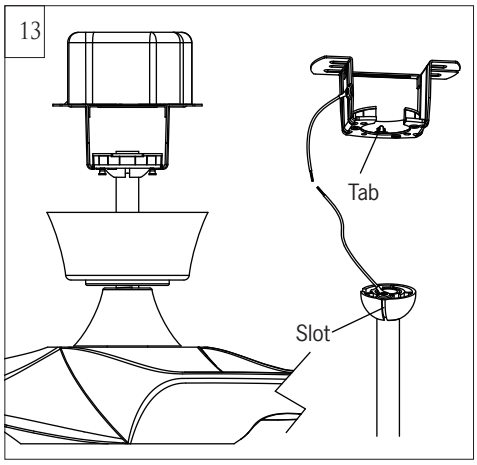

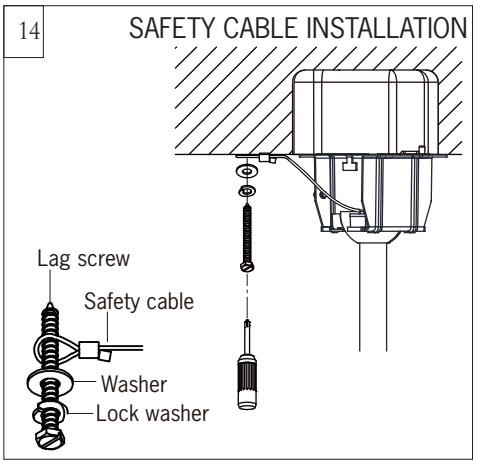

Install ball end of downrod into mounting bracket opening. Align (engage) slot on ball with tab on mounting bracket.
Warning: Failure to align slot on ball with tab may result in serious injury.
Important: If using the angle mount, make sure open end of mounting bracket is installed facing the higher point of the ceiling and make sure the ceiling angle is not steeper than 20º. Longer downrod may be necessary allowing the fan blades to rotate without obstructions.

Safety cable must be installed into the house structure using 3" lag screws, washers, and lock washers provided, required for outdoor applications and in Canada (All fans installed in Canada), and for USA fan and light kit combinations over 35lbs.
Make sure that when the safety cable is fully extended the lead wires are longer than the cable and no stress is placed on the lead wires.
Note: If Installing The Secondary Support Safety Cable in the U.S., Do Not Remove Knockouts In The Outlet Box.

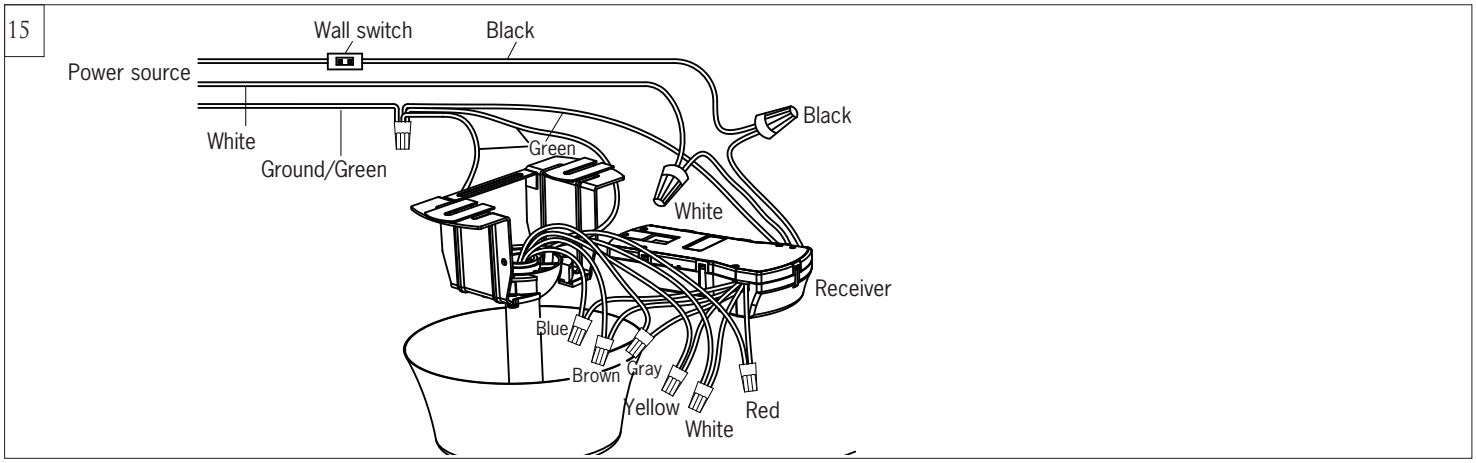

Make wiring connections using wire connectors provided as indicated above.
Brown wire from fan to Brown wire from receiver marked Motor U.
Gray wire from fan to Gray wire from receiver marked Motor V.
Blue wire from fan to Blue wire from receiver marked Motor W.
White wire from fan marked "For light" to White wire from receiver marked "For light".
Yellow wire from fan marked "For light" to Yellow wire from receiver marked "For light".
Red wire from fan marked "For light" to Red wire from receiver marked "For light".
White (Neutral) wire from house to White wire from remote marked AC IN N.
Black (Live) wire from house to Black wire from remote marked AC IN L.
Connect all green grounded wires to Grounded wire from House.
Make sure that no filaments are outside of the wire connectors.
Insert the remote receiver into mounting bracket.
After making the wire connections, the wires should be spread apart with the grounded conductor and the equipment-grounding conductor on one side of the outlet box and ungrounded conductor on the other side of the outlet box. The splices after being made should be turned upward and pushed carefully up into the outlet box.
Caution: The switch used shall have been investigated and found acceptable for use as a general-use switch, as a speed control, or the like.
Caution: The installation has to be complete before operating the fan. Receiver has to be used on the fan and cannot be bypassed.
Caution: For supply connections, use wires suitable for at least 75°C (167°F).

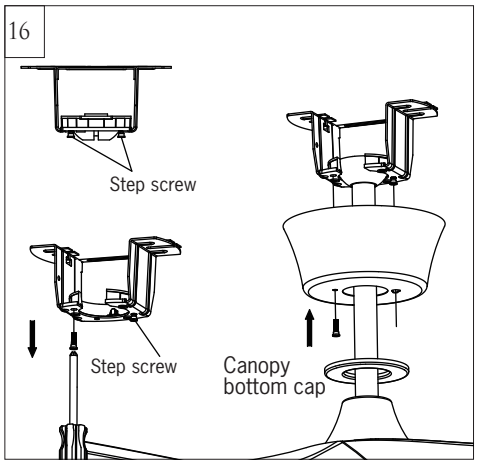

Partially loosen one and remove one preassembled step screw from mounting bracket (Do not remove the other set screws). Save the screw.
Lift canopy up, aligning its keyhole slot with the preassembled step screw on mounting bracket and twist clockwise to lock in place. Reinstall the other step screw and tighten the screws securely.
Attach canopy bottom cap onto canopy by aligning its holes with the step screws on mounting bracket and fix it with the magnet embraced in the cap.

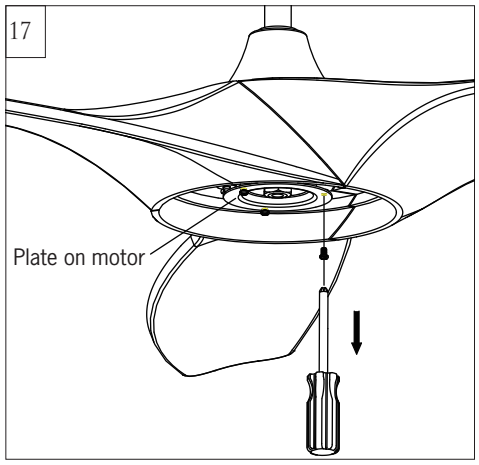

Loosen 2 and remove 1 preassembled screw from the plate on motor. Save screw for later use.

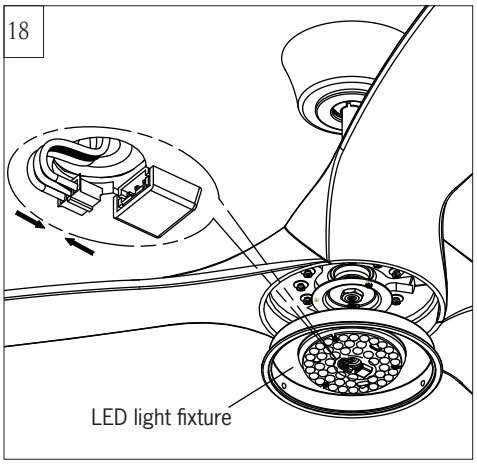

Feed the light lead wire over the central hole of the LED light fixture.
Connect the lead wires from fan to the quick connector on light fixture. Make sure the quick connectors are clasped firmly.

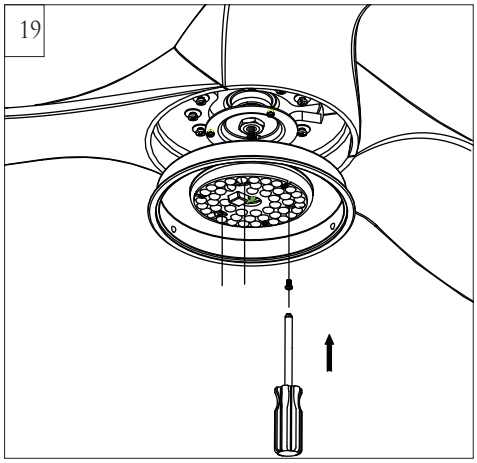

Attach the LED light fixture onto the plate on motor, aligning the keyhole slots on the light fixture with the preassembled screws on the plate. Twist clockwise till lock. Reinstall the other 2 set screws. Tighten all the set screws securely.
Note: Push the light wires back into the center hole of the light fixture after connecting.

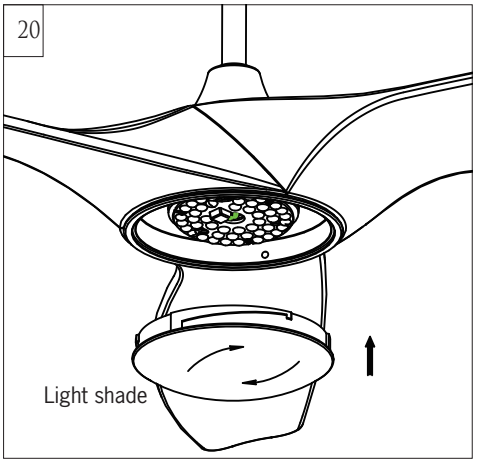

Attach the light shade by locating dimples in light pan with grooves on the light shade and twist clockwise until tight.

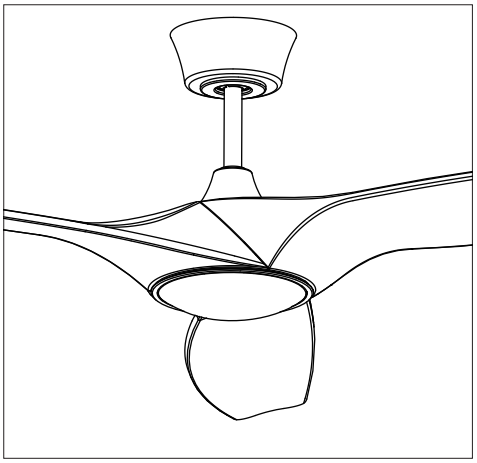

Blanking plate installation

1

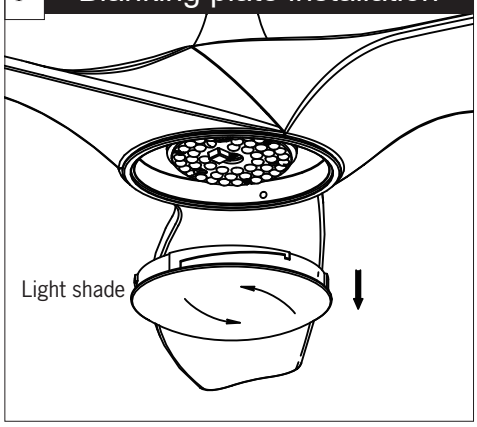

Remove the light shade by turning counterclockwise.

2

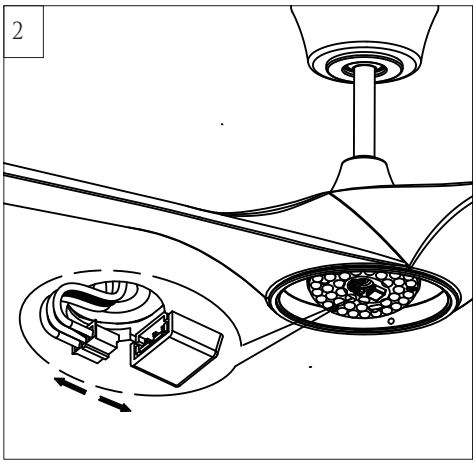

Disconnect the lead wires from fan to the quick connector on light fixture.

3

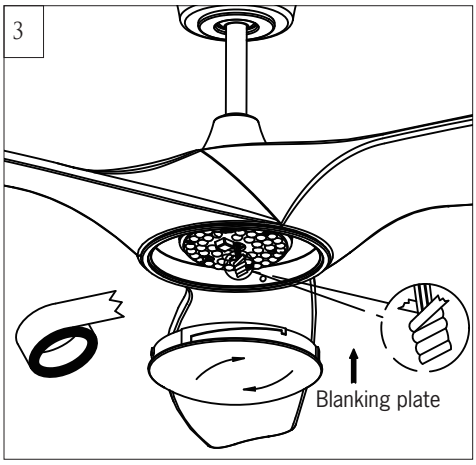

Isolate the lead wires from fan with electrical tape.
Attach the blanking plate by locating dimples in light pan with grooves on the blanking plate and twist clockwise until tight.

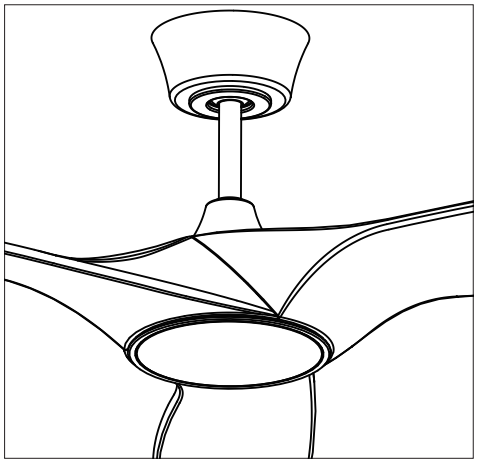

Remote Controller Operation

Remove the battery cover from the remote control transmitter and install batteries. Replace the cover. This remote uses 2 1.5V/AAA batteries.

Note: If not using for long periods of time, remove the batteries to prevent damage to remote controller, and store the remote controller away from excess heat or humidity. The batteries will weaken with age and should be replaced before they leak or corrode as this will damage the controller. Dispose of the used batteries properly. Always keep batteries out of the reach of children.

Note: Refer to page 9 for fan operation with Bond app.

Dimming, Non Dimming Setting (Only available for fans with light)

In the dimming mold, it is a light dimming selection and it is to be used with dimmable luminaries. The remote controller is set with dimming function at factory.
In ON/OFF (non-dimming mold), it is for light ON/OFF only (non-dimming function).

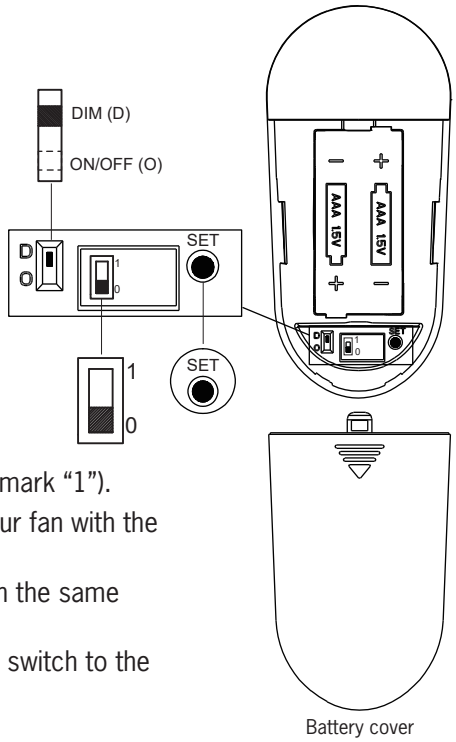

Universal Mode and Learning Mode

Your remote controller has two options: “Universal Mode” (mark “0”) and “Learning Mode” (mark “1”).

If choosing “Universal Mode,” simply move the switch to the LOWER position (mark “0”). Your fan with the remote controller is ready to use.

Note: If using Universal Mode, your fan can be controlled with other remote controllers with the same setting.

To control the fan with a specific remote controller, choose “Learning Mode” by moving the switch to the UPPER position (mark “1”) and then follow the Learn Mode steps below.

Learn Mode

Important: Turn the power on for ONLY the specific fan you wish to pair with the remote controller. Make sure to turn the power off for all other fans with which you use the same remote controller.

Restore power to your fan, press and hold the “SET” button to pair the transmitter and receiver. You must press the ‘SET” button within 60 seconds of restoring power to the fan.

Note: Fan will at first operate at minimum speed and light will blink (if your fan has a light) after you’ve chosen Learn Mode.

Note: If the power is already on, you must turn the power off and then back on for the remote control setting.

Note: If you reset the controller to Universal Mode (mark “0”) and later want to pair the controller again to a specific fan, you have to repeat the Learn Mode steps.

The remote control buttons control the fan speed as follows:

1 = minimum speed 2 = low speed 3 = medium low speed
4 = medium speed 5 = medium high speed 6 = high speed

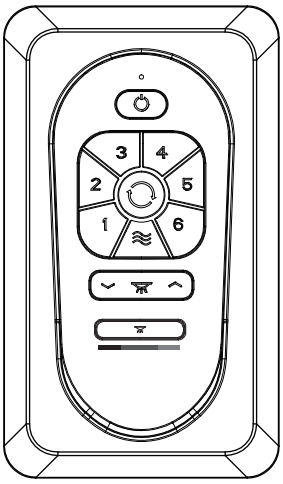

This button turns the fan off.

Forward/Reverse button: This button is to control direction of fan rotation. Press once to change direction of the fan rotation. Fan must be running to reverse.

Light button- Press this button to turn light on or off.

Light button- Press this button to desired brightness, dim to bright.

Light button- Press this button to desired brightness, bright to dim.

Press this button to change correlated color temperatures (CCT)

This light kit includes 2700 (Warm white), 3000 (Soft white), 3500K (Neutral White), 4000K (Cool White), 5000K (Daylight) and 6500K (Daylight Deluxe) correlated color temperatures (CCT). Get desired CCT by pressing the converted button.

Breeze: Press the Breeze button, fan will operates randomly among minimum, low and medium low speed at intervals of 30 seconds until the breeze mode is canceled.
Breeze mode can be erased by pressing either the power or speed control buttons.
Note: This remote controller has auto resume function. The fan and light will maintain the last setting when turned back on, with the exception of Breeze mode.

Install Transmitter wall mount cradle with 2 screws provided.

Useful tips:

The remote transmitter can be removed by pressing it upward from the lower half.

The remote transmitter can be held on magnetic metal materials by a magnet built in the transmitter.

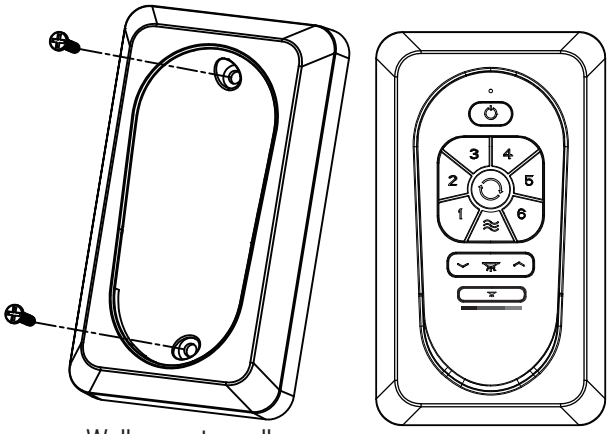

Wall mount cradle

The receiver provides the following protective functions:

Lock protection: The DC motor has a build-in safety feature against blade obstruction during operation. If something obstructs the fan blades, the motor will stop operation after about 20 seconds of interruption. Please remove obstacles and reset it by turning the power off, and then turn power back on.

Over 40W protection: When the receiver detects motor power consumption which is greater than 40W, the fan RPM will automatically lower to prevent it from overloading.

User Tips

1. If your fan is operating automatically after installation, it is still using the factory setting. Follow the settings for Learn Mode above to reset.

2. If the fan or light isn't working, reset power (turn the power off then turn the power back on) and follow the Universal Mode or Learn Mode remote control settings.
Note: Make learn setting either you change it from universal mode to learn mode or change it back to universal mode from learn mode.

3. If two or more fans in the same remote signal range are on the same power supply, they cannot be operated separately by remote control. Use a separate power supply for each fan, such as an individual wall switch, and restrict the power supply to only the fan which you are pairing with its transmitter in order to use the remote controller.

4. When the fan is turned on to oscillate in either forward or reverse direction, it may shudder briefly until fully engaged. This is a normal operation for this fan; the shuddering will quickly cease as movement is engaged.

THIS DEVICE COMPLIES WITH PART 15 OF THE FCC RULES OPERATION IS SUBJECT TO THE FOLLOWING TWO CONDITIONS. (1)THIS DEVICE MAY NOT CAUSE HARMFUL INTERFERENCE AND (2) THIS DEVICE MUST ACCEPT ANY INTERFERENCE RECEIVED, INCLUDING INTERFERENCE THAT MAY CAUSE UNDESIRED OPERATION.

Fan operation with Bond Home APP

Download the Bond Home app with your smart devices. The app is available on the Google Play Store and Apple Store.
Or get it from bond home link, http://bondhome.io/app

Create a new account following on-screen operating steps.

Make the fan (Smart by Bond wi-fi receiver) connection with wi-fi router. Within 60 seconds of restoring power to the fan, Press and hold the “Power” button of transmitter for 5 seconds until light blinks and fan runs at lowest speed for about 10 seconds. Your fan has now successfully learned the transmitter.

Note: If you haven’t made “learn” function setting for the fan remote yet. You may handle it via the bond app. On the fan operation UI, tap device setting “ or ” at upper right area following on-screen operating and select Manage Remotes.

Note: Check and make sure power on and Wi-Fi router is functional.

To add a new device. Press “+” and choose Smart by Bond, and following on-screen information and set up your fan (Wi-Fi receiver) with smart phone/device and Wi-Fi router. You can also connect to the receiver by tapping “Scan QR Code”. The QR code label is located inside the cover of the transmitter's battery holder.

Note: The receiver and the QR code label in the transmitter are one-on-one pairing, the way with QR code label is not applicable if you use replacements (Receiver or Transmitter).

Tap “ or ” and follow on-screen information to set up schedules.

Tap “ “ and follow on-screen information to set up group.

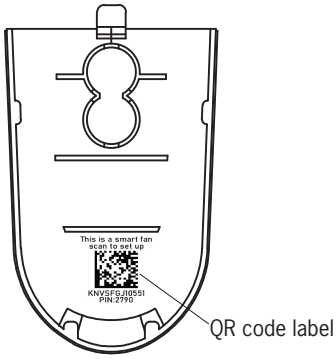

Note: If “Bond Configuration” Wi-Fi network cannot be found, try pressing and holding the button of power on the remote transmitter for 10 seconds, the Wi-Fi network should re-appear.

Note: You may control fan from multiple smart phones or tablets by logging onto the same Bond Home account on all the smart phones/tablets.

Compatible with Amazon Alexa, Google Home and Samsung SmartThings

Tap “Settings” on the bond app, select Manage Integrations and you may find the Smart Cloud integrations.

Or you may download Alexa, Google Home, Samsung SmartThings app. You may need to sign up an account if you don’t have it yet. Sign in your Alexa/Google Home/Samsung SmartThings account.
- Login Amazon Alexa, Google Home or Samsung SmartThings app to enable the skill and discover the Fan with Smart by Bond wi-fi receiver.
- Come back to the Smart device with bond app and define the device/Fan.

Connect to Amazon Echo, Google Home or Samsung SmartThijngs to make your fan can be voice-activated, and available with UI (User interface) of Amazon Echo, Google Home or Samsung SmartThings.

Initialize (Factory reset) the wi-fi receiver

If there are questions on the fan operation with bond app, following below steps to initialize the wi-fi receiver and redo bond app stetting.
Turn the fan power off, and then turn the power back. Within 30 seconds, press and hold the button of the first speed/1st on the transmitter for 15 seconds until light (if applicable) blinks. The receiver has been initialized.
Wait for 10 seconds and redo bond app setting.
Initialization (Factory reseting) can also be performed via the app: Tap device setting “ or ” and then tap “ or ” at upper right corner to remove device, and then select “Wipe All Data”.

Troubleshooting

If you have difficulty operating your new ceiling fan, it may be the result of incorrect assembly, installation, or wiring. In some cases, these installation errors may be mistaken for defects. If you experience any faults, please check this Troubleshooting Chart. If a problem cannot be remedied, or you are experiencing difficulty in installation, please call our Customer Service Center at the number printed on your parts list insert sheet.

Warning: Before you begin installing, servicing or cleaning the fan unit, switch the power off at the service panel and lock the service panel to prevent the power from being switched back on accidentally. If the service panel cannot be locked to prevent the power from being switched on accidentally, securely fasten a warning sign to the service panel.

Trouble	Suggested Remedy
1. If fan does not start:	1. Check main and branch circuit fuses or circuit breakers. 2. Check line wire connections to fan and switch wire connections in switch housing. **CAUTION**: Make sure main power is turned off. 3. If this fan uses manual forward/reverse switch, make sure the switch is pushed firmly either way. Fan will not operate when switch is in the middle. 4. If this fan uses a remote controller, make sure dip switches are in the correct setting and make sure the battery works.
2. If fan sounds noisy:	1. Check to make sure all screws in motor housing are snug (not over tightened). 2. Check to make sure the screws which attach the fan blade holder to the motor are tight. 3. Check to make sure wire nut connectors in switch housing are not rattling against each other or against the interior wall of the switch housing. **CAUTION**: Make sure main power is turned off before entering switch housing. 4. Check to be sure lightbulb is tight in socket and not touching the glass shade. 5. Some fan motors are sensitive to signals from Solid State variable speed controls. 6. Allow "break-in" period of 24 hours. Most noises associated with a new fan will disappear after this period.
3. If fan wobbles:	1. If this is a downrod mount fan, make sure the ridge on mounting bracket engages the notch in the downrod ball. 2. Make sure that canopy, mounting bracket or mounting plate are tightened securely to ceiling junction box and junction box is mounted firmly to ceiling joist. 3. Check that all blades are screwed firmly into blade holders. 4. Check that all blade holders are tightened securely to motor. 5. Most fan wobble problems are caused when blade levels are unequal. Check this level by selecting a point on the ceiling above the tip of one of the blades. Measure this distance from blade tip to ceiling. Keeping measure within 1/8", rotate the fan until the next blade is positioned for measurement. Repeat for each blade. If all blade levels are not equal, you can adjust blade levels by the following procedure. To adjust a blade tip down, insert a washer (not supplied) between the blade and blade holder at the screw closest to the motor. To adjust a blade tip up, insert washer (not supplied) between the blade and blade holder at the two screws farthest from the motor. Reverse the position of the washer if blades mount from top of blade. 6. If blade wobble is still noticeable, interchanging two adjacent blades can redistribute the weight and possibly result in smoother operation. If the above steps do not eliminate the wobble problem, you will need to dynamically balance your fan with balancing kit provided.
4. If light does not work:	1. Check blue wire from fan to make sure it is connected to hot wire from house. 2. Check for loose or disconnected wires in fan switch housing. 3. Check for loose or disconnected wires in light kit. 4. Check for faulty lightbulb and make sure bulb is tight in socket. 5. Remove light kit and check the plug connections if they are present. 6. If this fan uses a remote controller, make sure dip switches are in the correct setting and make sure the battery works. **CAUTION**: Make sure main power is turned off before entering switch housing and/or canopy.

Oct. 2025 VC