# Kenton Picture Light Convertible Plug-in | 1-Light 52813BK

© 2026 Kichler Lighting LLC All Rights Reserved

## SPECIFICATIONS

### Certifications/Qualifications

| | |
|---|---|
| ADA Compliant | No |
| Prop65 | Yes |
| Location Rating | Dry |
| | kichler.com/warranty |

### Dimensions

| | |
|---|---|
| Height | 2.75" |
| Width | 12" |
| Height From Center Of Wall Opening (Spec Sheet) | 1.5" |
| Depth | 6" |
| Weight | 4.5 LBS |
| Canopy Height | 2.75" |
| Canopy Width | 11.25" |
| Canopy Depth | 2.25" |

### Electrical

| | |
|---|---|
| Input Voltage | 120 V |

### Light Source

| | |
|---|---|
| Light Source | Bulb |
| Lamp Included | Not Included |
| # Of Bulbs/LED Modules | 1 |
| Max Or Nominal Watt | 13 W |
| Lamp Type | T10 |
| Socket Type | E26 (Medium) |
| Dimmable | Yes |

### Mounting/Installation

| | |
|---|---|
| Interior/Exterior | Interior Product |
| Mounting Weight | 4.5 LBS |
| Lead Wire Length | 72 |

## FIXTURE ATTRIBUTES

### Housing/Glass

| | |
|---|---|
| Primary Material | Steel |

### Outer Shade Details

| | |
|---|---|
| Type | Shade |
| Location | Outer |
| Material | Steel |
| Shape | Rectangle |
| Length | 11.25" |
| Height | 2.25" |
| Width | 2.25" |

### Product/Ordering Information

| | |
|---|---|
| Sku | 52813BK |
| Finish | Black |
| UPC | 783927090506 |

### Finishes

- Black
- Champagne Bronze™
- Polished Nickel

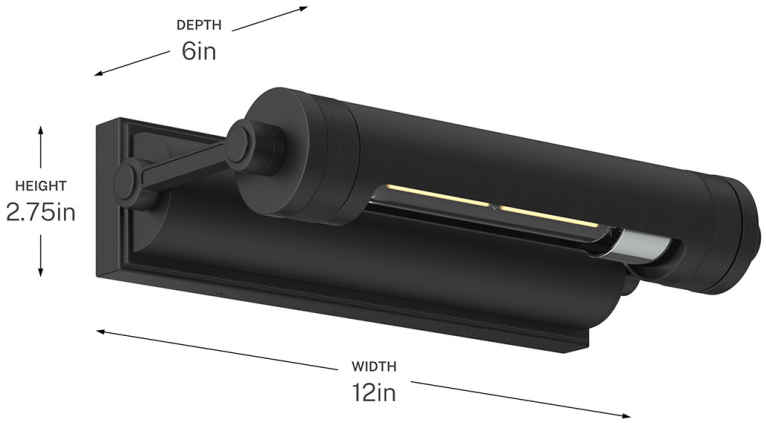


## ALSO IN THIS FAMILY



52814BK



52814CPZ

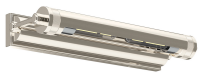

52814PN



52815BK



52815CPZ



52815PN