Kenton Picture Light Convertible Plug-in | 1-Light 52813CPZ

© 2026 Kichler Lighting LLC All Rights Reserved

SPECIFICATIONS

Certifications/Qualifications

ADA Compliant	No
Prop65	Yes
Location Rating	Dry
	kichler.com/warranty

Dimensions

Height	2.75"
Width	12"
Height From Center Of Wall Opening (Spec Sheet)	1.5"
Depth	6"
Weight	4.5 LBS
Canopy Height	2.75"
Canopy Width	11.25"
Canopy Depth	2.25"

Electrical

Input Voltage	120 V

Light Source

Light Source	Bulb
Lamp Included	Not Included
# Of Bulbs/LED Modules	1
Max Or Nominal Watt	13 W
Lamp Type	T10
Socket Type	E26 (Medium)
Dimmable	Yes

Mounting/Installation

Interior/Exterior	Interior Product
Mounting Weight	4.5 LBS
Lead Wire Length	72

FIXTURE ATTRIBUTES

Housing/Glass

Primary Material	Steel

Outer Shade Details

Type	Shade
Location	Outer
Material	Steel
Shape	Rectangle
Length	11.25"
Height	2.25"
Width	2.25"

Product/Ordering Information

Sku	52813CPZ
Finish	Champagne Bronze™
UPC	783927090544

Finishes

- Black
- Champagne Bronze™
- Polished Nickel

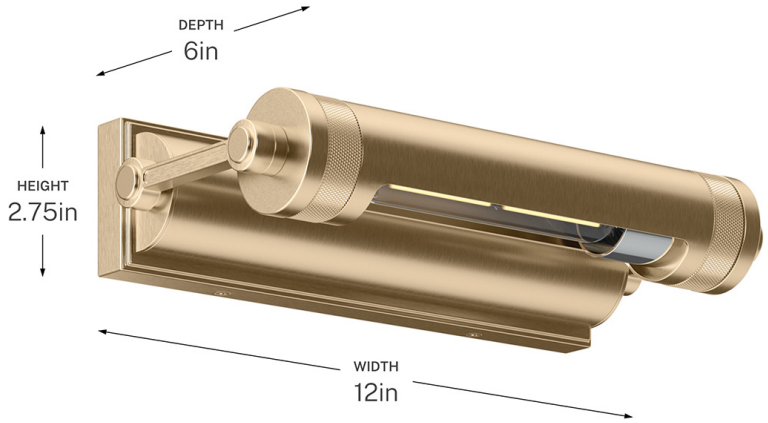

ALSO IN THIS FAMILY



52814BK



52814CPZ

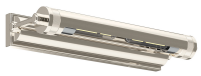

52814PN



52815BK



52815CPZ



52815PN