Ruehl Wall Sconce 1-Light | Steel | Cylinder Shade 52840CPZ

© 2026 Kichler Lighting LLC All Rights Reserved

SPECIFICATIONS

Certifications/Qualifications

ADA Compliant	No
Prop65	Yes
Location Rating	Dry
	kichler.com/warranty

Dimensions

Height	7.25"
Width	6.25"
Height From Center Of Wall Opening (Spec Sheet)	3"
Depth	6"
Weight	1.96 LBS
Canopy Width	4.75"
Canopy Depth	0.75"

Electrical

Input Voltage	120 V

Light Source

Light Source	Bulb
Lamp Included	Not Included
# Of Bulbs/LED Modules	1
Max Or Nominal Watt	9 W
Lamp Type	A
Socket Type	E26 (Medium)
Dimmable	Yes

Mounting/Installation

Interior/Exterior	Interior Product
Mounting Weight	1.96 LBS
Install Glass Up Or Down	Down
Lead Wire Length	8
Wire Connectors	Wire Nuts

FIXTURE ATTRIBUTES

Housing/Glass

Primary Material	Steel

Outer Shade Details

Type	Shade
Location	Outer
Material	Steel
Shape	Cylinder
Height	7.25"
Diameter	3.4"

Product/Ordering Information

Sku	52840CPZ
Finish	Champagne Bronze™
UPC	783927092524

Finishes

- Black | Champagne Bronze™
- Champagne Bronze™
- Lacquered Brass
- Lacquered Bronze | Lacquered Brass

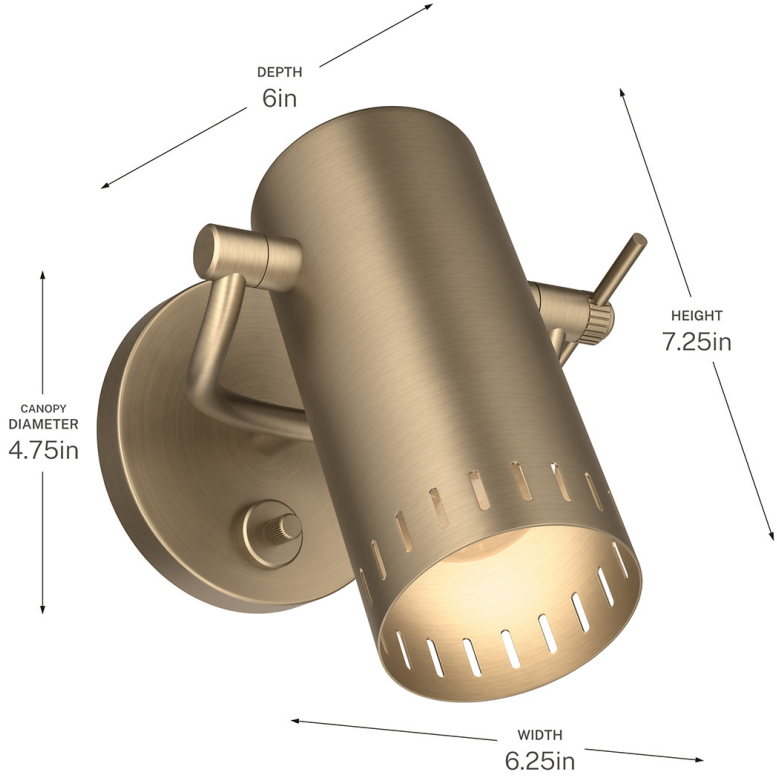

ALSO IN THIS FAMILY



52841BK

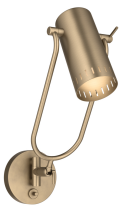

52841CPZ



52841LBR



52841LBZ



52842BK



52842CPZ