BEVERLY
42154

PENDANTS

PROJECT



DESCRIPTION

Four lamp pendant with drops of clear crystal balls with bubbles inside, three colors available: textured silver silk shade, white or black organza fabric shade.

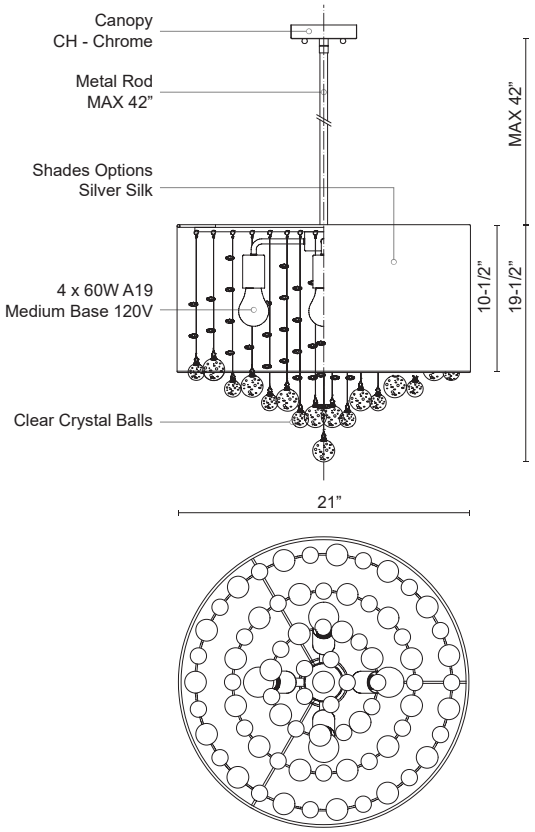

SPECIFICATION DETAILS

* For custom options, consult factory for details.

Fixture Dimensions	D21" x H19-1/2"
Lamp Type	Incandescent, A19, Medium Base
Wattage	4 x 60W
Voltage	120V
Crystal Details	Clear Encased Bubble Crystal
Shade Details	Textured Silk and Organza Fabric Shade
Adjustable	Yes
Rod Length	42" Max (3x12" + 1x6")
Product Adaptor	ADP001CH, Sold Separately
Location	Dry
Bulbs Included	No
Warranty	5 Years
Canopy Dimensions	D4-5/8" x H7/8"
Finish Option(s)	Silver

KUZCO

19054 28TH AVENUE
SURREY - BC V3Z 6M3
CANADA

WWW.KUZCOLIGHTING.COM

COMMENT

c UL us LISTED