MADONIA
488111

PENDANTS

PROJECT





488111BZ
Bronze

DESCRIPTION

Single lamp pendant with square white opal glass with metal details in bronze.

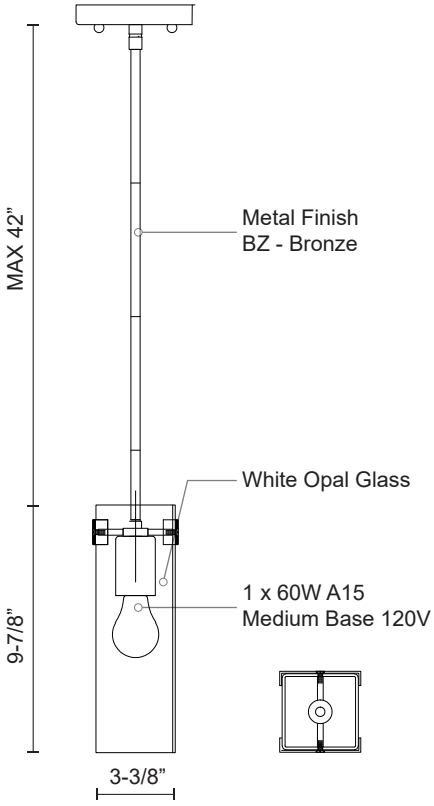

FRONT VIEW TOP VIEW

SPECIFICATION DETAILS

Fixture Dimensions	W3-3/8" x L3-3/8" x H9-7/8"
Lamp Type	Incandescent, A15, Medium Base
Wattage	1 x 60W
Voltage	120V
Glass Details	Opal Glass
Adjustable	Yes
Rod Length	42" Max (3x12" + 1x6")
Product Adaptor	ADP001BZ, APD001BN, ADP001CH, Sold Separately
Location	Dry
Bulbs Included	No
Canopy Dimensions	L4-3/4" x W4-3/4" x H3/4"

* For custom options, consult factory for details.
* For warranty information, please visit www.kuzcolighting.com/warranty

KUZCO

CANADA: 19054 28TH AVENUE - SURREY, BC V3Z 6M3
USA: 3035 E. LONE MOUNTAIN ROAD - LAS VEGAS, NV 89081

WWW.KUZCOLIGHTING.COM

© 2010 KUZCO LIGHTING. ALL RIGHTS RESERVED.

COMMENT

UL CERTIFIED
SAFETY US·CA
E348916