EXETER
70272
VANITY

PROJECT



DESCRIPTION

Two lamp vanity with white opal cylinder glass with your choice of chrome metal back plate. Can be mounted upward or downward.

SPECIFICATION DETAILS

* For custom options, consult factory for details.

Fixture Dimensions	W12-1/2" x H9-1/2" x E6"
Lamp Type	Incandescent, A19, Medium Base
Wattage	2 x 60W
Voltage	120V
Glass Details	Opal Glass
Location	Damp
Bulbs Included	No
Warranty	5 Years
Canopy Dimensions	W7-7/8" x H5-3/4" x E7/8"
Finish Option(s)	Chrome

White Opal
Cylinder Glass

Metal Finish
CH - Chrome

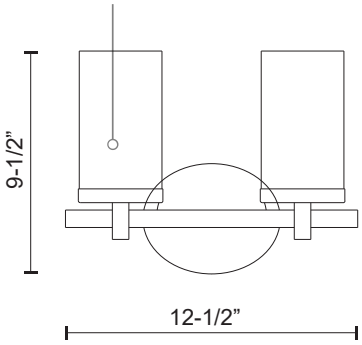

FRONT VIEW

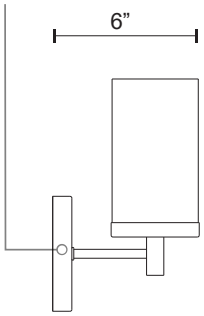

SIDE VIEW

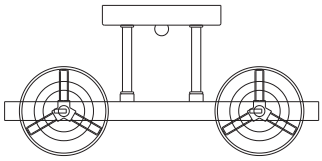

TOP VIEW

KUZCO

19054 28TH AVENUE
SURREY - BC V3Z 6M3
CANADA

WWW.KUZCOLIGHTING.COM

COMMENT

c UL us LISTED