LED Chandelier

CH19733
INSTALLATION SHEET

START FROM HERE

- Make sure power is completely off at the fuse box.
- Have your fixture installed by a qualified licensed electrician
- Prepare everything in a clear area.
- Wear gloves at all times during this installation.
- Read instructions carefully before you start assembly.
- Keep this instruction sheet for future reference.

Technical Support: 1-855-855-8926

Please Note:
- For dimming, a TRIAC or an ELV type of dimmer is required.

1. Remove the fixture from its original packaging. Next, remove the mounting plate **(1c)** from the canopy **(2a)** by removing the screws **(2b)**. Install the mounting plate **(1c)** to the junction box **(1a)** with screws **(1d)**. For additional support, add wood screws **(1e)** to plastic anchors **(1f)** in the ceiling.

2. Next, attach all the diffusers **(3b)** to the fixture arms **(3a)**. Before you mount the canopy to the mounting plate, select the desired length of the fixture to hang. First screw on the connector **(2c)** to the canopy. Add extension rods **(2d)** by threading clockwise. Next pull the wire **(2e)** through the extension rods into the canopy.

3. You are now ready to mount the canopy to the mounting plate. First connect all wires correctly G ground to ground, N neutral wire (white to white), L ive wire (black to black) with provided marrettes **(1b)** from the hardware package. Push the canopy **(2a)** up towards the ceiling and screw on the screws **(2b),** this will secure the canopy **(2a)** to the mounting plate **(1c)**.

4. You have now completed the installation of your fixture, enjoy.

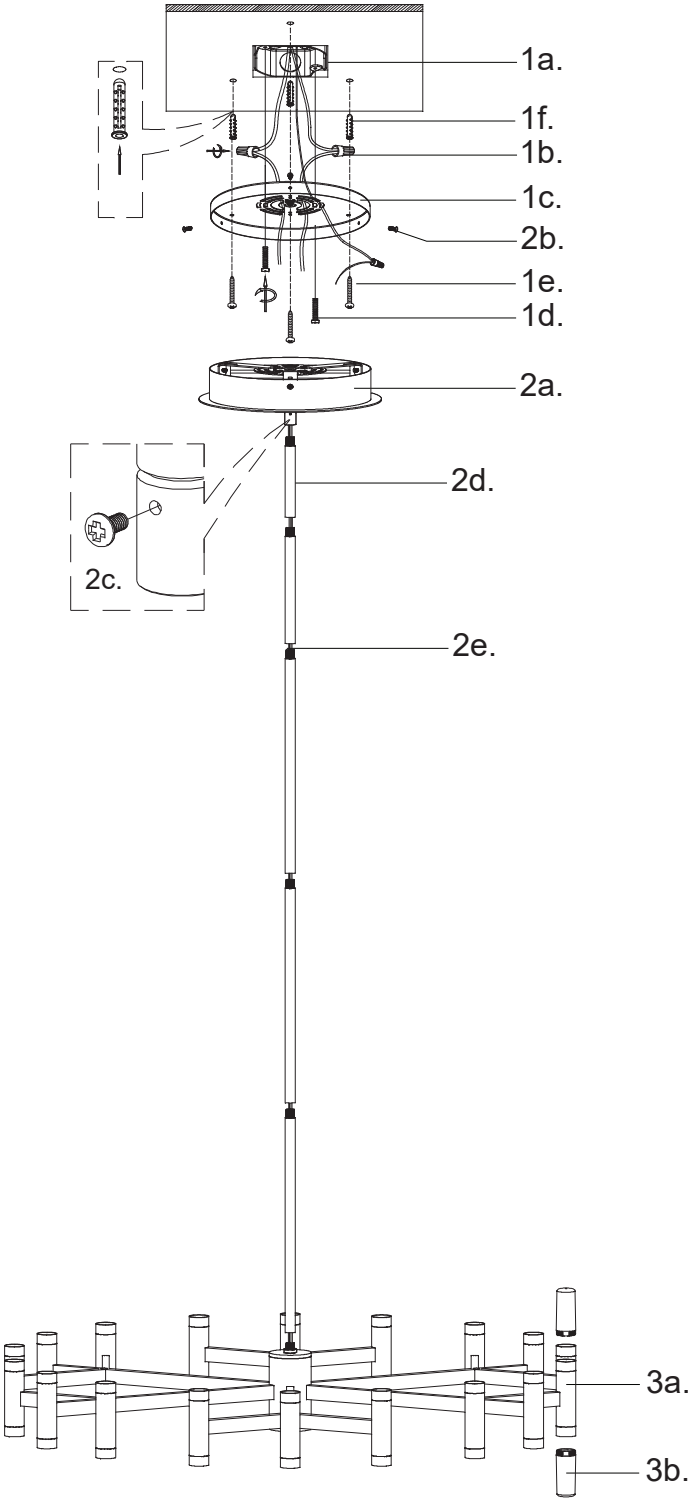

KUZCO
19054 28th Avenue Surrey, BC Canada V3Z 6M3
T: 604 538 7162 TF: 1-855 85 KUZCO F: 604 538 7196
W: kuzcolighting.com
20190108