REZZ
FM63432

JUNE 2022 PRODUCTS

PROJECT

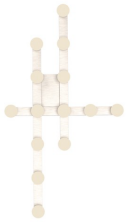

FM63432-BN
Brushed Nickel

DESCRIPTION

The Rezz collection is the reimagining of the old Hollywood style we know and love. Simple, glamorous opal glass diffusers dance around a modern, minimal frame to create a totally new look. This collection is simple and stunning, great for a wide variety of design sensibilities. Available in Brushed Nickel accents.

SPECIFICATION DETAILS

Fixture Dimensions	L31-3/4" x W17-3/4" x H3-3/4"
Light Source	LED with DC Driver
Wattage	51W
Total Lumens	4400lm
Delivered Lumens	BN-1250lm;
Voltage	120V
Color Temperature	3000K
CRI (Ra)	90CRI
Optional Color Temps	2700K - 5000K Available, Minimum Order Quantities Apply
LED Rated Life	50,000 hours
Dimming	100% - 10%, TRIAC or ELV Dimmer (Not Included)
Glass Details	Opal Glass
ADA Compliant	Yes
Location	Dry
Mounting Style	All Orientation; Ceiling and Wall;
CEC Title 24 JA8	Yes, JA8-2022
Canopy Dimensions	L6-1/8" x W5-1/8" x H1-5/8"
Paint Finish	BN01;

* For custom options, consult factory for details.
* For warranty information, please visit www.kuzcolighting.com/warranty

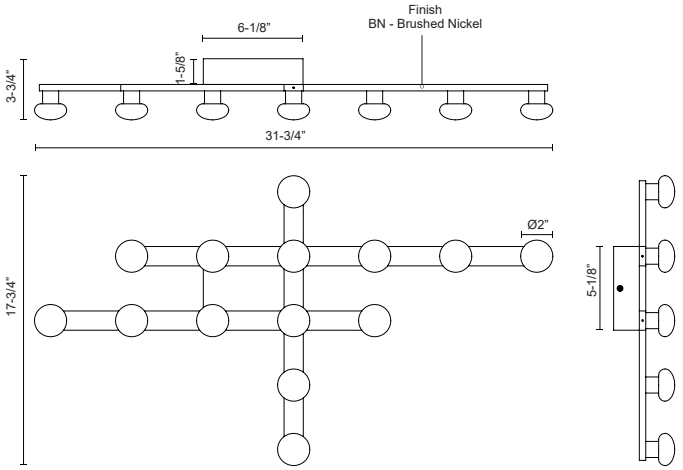

KUZCO

CANADA: 19054 28TH AVENUE - SURREY, BC V3Z 6M3
USA: 3035 E. LONE MOUNTAIN ROAD - LAS VEGAS, NV 89081

WWW.KUZCOLIGHTING.COM

© 2022 KUZCO LIGHTING. ALL RIGHTS RESERVED.

COMMENT

Intertek