LED Pendant

LD2-PD08W10

INSTALLATION SHEET

START FROM HERE

- Make sure **POWER** is **COMPLETELY OFF** at the fuse box
- Have your fixture installed by a qualified licensed electrician
- Prepare everything in a clear area
- Wear gloves at all times during this installation
- Read instructions carefully before you start assembly
- Keep this installation sheet for future reference

Technical Support: 1-855-855-8926

Please Note:

- This Kuzco LED fixture comes with pre-wired LED module(s).
- Unless instructed to do so, please do not touch any part of the LED module(s) as any unnecessary contact with the module could cause permanent damage.
- For dimming, an ELV (Electronic Low Voltage), TRIAC or 0-10V type of dimmer is required.
- 120-277V input

1. Remove fixture from its original package
2. Separate mounting plate **(1c)** from canopy **(2a)** by removing decorative nuts **(2c)**
3. Align mounting plate screws **(1d)** to desired orientation, and then attach mounting plate **(1c)** to electrical junction box **(1a)** using junction box screws provided **(1e)** in hardware package
4. To change fixture height, shorten or lengthen wire by removing screw **(2b)** from canopy **(2a)** and push or pull wire to your desired length. Secure screw **(2b)** in canopy **(2a)** to lock wire in place
5. Make proper electrical connections with wago connector **(3e)** provided. Attach fixture cover **(3b)** to fixture head **(3a)** and secure with screws **(3c/3d) (See Illustration 1)**
6. Make proper electrical connections (**black** to **hot** "L", **white** to **neutral** "N", **ground** to **"GND")** with wire nuts **(1b)** provided in hardware package. Connect 0-10V dimming wire, DIM+ to purple, DIM- to gray, with wire nuts provided. Use wire nuts to cap the 0-10V wires if not used
7. Align and insert mounting plate screws **(1d)** through holes on canopy **(2a)**, secure with decorative nuts **(2c)**

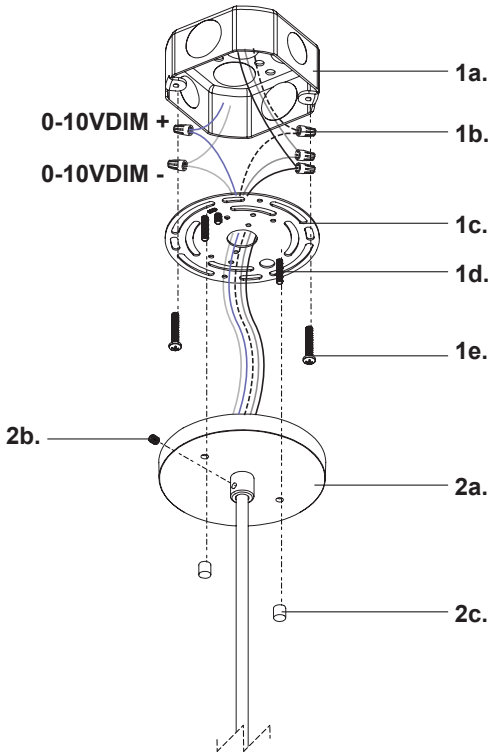

Illustration 1

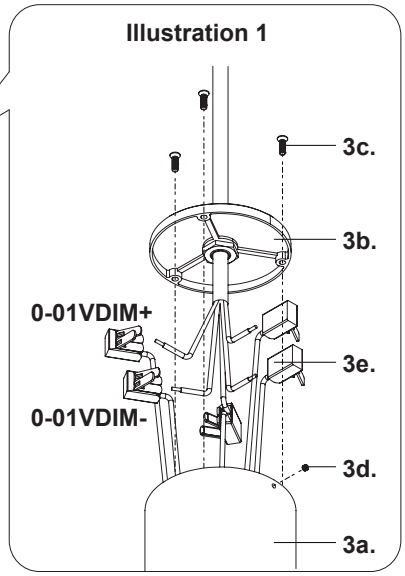

KUZCO

19054 28th Avenue Surrey, BC Canada V3Z 6M3
T: 604 538 7162 TF: 1-855 85 KUZCO F: 604 538 7196
W: kuzcolighting.com
20250401