Ceiling LED Pendants

LP52128
INSTALLATION SHEET

START FROM HERE

- Make sure **POWER** is **COMPLETELY OFF** at the fuse box
- Have your fixture installed by a qualified licensed electrician
- Prepare everything in a clear area
- Wear gloves at all time during this installation
- Read instructions carefully before you start assembly
- Keep this installation sheet for future reference

Technical Support: 1-855-855-8926

Please Note:

- All Kuzco LED fixtures come with pre-wired LED module(s).
- Unless instructed to do so, please do not touch any part of the LED module(s) as any unnecessary contact with the module could cause permanent damage.
- For dimming, an ELV (Electronic Low Voltage) type of dimmer is required.

CAUTION: HEAVEY FIXTURE, THE JUNCTION BOX NEEDS TO BE REINFORCED BEFORE INSTALLATION.

1. Remove the fixture from it's original packaging. Remove the canopy mounting plate **(1c)** from within the canopy **(2b)** by removing the decorative nuts **(2c)**. Secure the mount plate **(1c)** (with canopy screws facing downward) to the reinforced junction box **(1a)**. Secure the mounting plate **(1c)** to the ceiling with screws **(1e)**, make sure to reinforce the wood behind the drywall. Now install the two screws **(1d)** provided to secure the mounting plate to the junction box **(1a).**

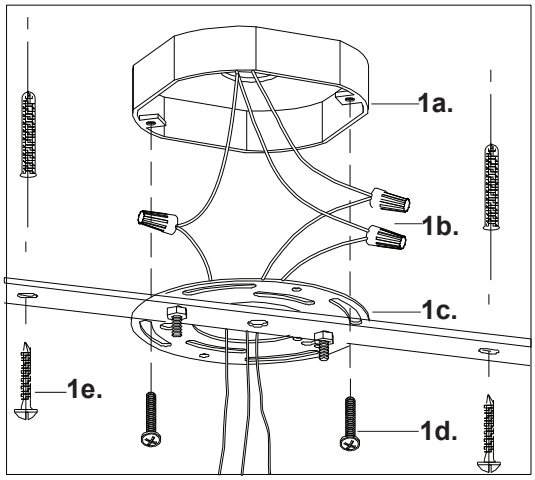

2. To shorten the conduit just leave out sections of conduit (**2d)**. To connect the conduit sections thread each conduit **(2d)** clockwise. Next, pass the electrical wire **(1b)** up through the conduit **(2d)** and through the canopy **(2b).** Next, thread the fixture **(3a)** to the conduit **(2d)**.

3. You are now ready to mount the canopy **(2b)** to the mounting plate **(1c).** First connect all wires **(1b)** correctly, black to black "L", white to white "N" and the ground to ground with the provided marrets from the hardware package. Align the threaded scews **(2a)** hanging downward from the mounting plate **(1c)** to the holes inside the canopy **(2b)**. Push the canopy up towards the ceiling so the two scews **(2a)** point through the holes in the canopy. You can then screw on the decorative nuts **(2c)** onto the threaded studs pointing through the canopy. This will secure the canopy to the mounting plate.

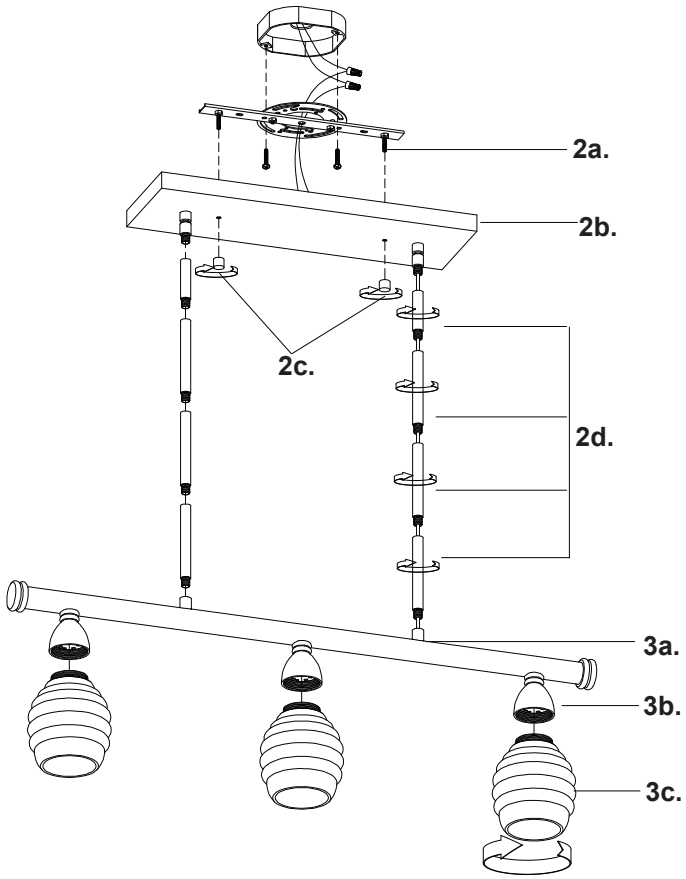

4. LED Engines are built in. Push the glasses (**3c)** to the LED engines **(3b)** and thread turning clockwise.

5. You have now completed the installation of your fixture, enjoy.

KUZCO
19054 28th Avenue Surrey, BC Canada V3Z 6M3
T: 604 538 7162 TF: 1-855 85 KUZCO F: 604 538 7196
W: kuzcolighting.com
20181127