CITADEL
VL52105

VANITY

PROJECT



DESCRIPTION

Vintage but modern LED single light vanity with elegant cannikin which omits the light beautifully through a billowing heavy gauged die-cast clear glass. Polished chrome details and is equipped with our powerful 120V AC LED technology. Can be mounted upward or downward and similar styled chandelier, pendants and walls sconces available. See series for full family details.



VL52105-CH
Chrome

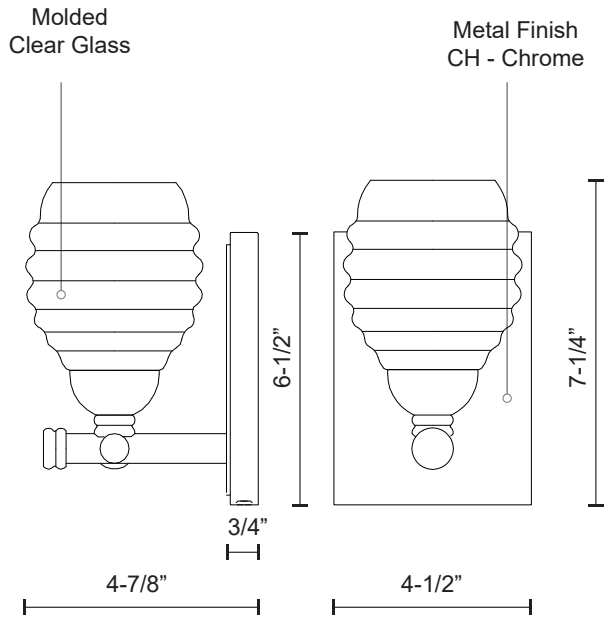

SPECIFICATION DETAILS

Fixture Dimensions	W4-1/2" x H7-1/4" x E4-7/8"
Light Source	LED
Wattage	5W
Total Lumens	400lm
Delivered Lumens	CH-245lm
Voltage	120V
Color Temperature	3000K
CRI (Ra)	90CRI
Optional Color Temps	2700K - 5000K Available, Minimum Order Quantities Apply
LED Rated Life	50,000 hours
Dimming	100% - 10%, ELV Dimmer (Not Included)
Location	Damp
Canopy Dimensions	W4-1/2" x H6-1/2" x E3/4"

* For custom options, consult factory for details.
* For warranty information, please visit www.kuzcolighting.com/warranty

KUZCO

19054 28TH AVENUE
SURREY - BC V3Z 6M3
CANADA

WWW.KUZCOLIGHTING.COM

COMMENT

Intertek