LED Vanity Lamp

VL52104
INSTALLATION SHEET

START FROM HERE

- Make sure **POWER** is **COMPLETELY OFF** at the fuse box
- Have your fixture installed by a qualified licensed electrician
- Prepare everything in a clear area
- Wear gloves at all time during this installation
- Read instructions carefully before you start assembly
- Keep this installation sheet for future reference

Technical Support: 1-855-855-8926

Please Note:

- All Kuzco LED fixtures come with pre-wired LED module(s).
- Unless instructed to do so, please do not touch any part of the LED module(s) as any unnecessary contact with the module could cause permanent damage.
- For dimming, an ELV (Electronic Low Voltage) type of dimmer is required.

1. Remove the fixture from its original packaging. Remove the canopy mounting plate **(3a)** from within the canopy and attach it to the electrical junction box **(3c)** , using the two screws **(2c)** provided in the hardware package.

2. Now feed the electrical wires **(3b)**, from inside the electrical box **(3c)**, through the metal cover plate **(3a).** Next, screw **(2c)** the canopy mounting plate onto the electrical junction box **(3c)**.

3. Attach all wiring **(3b)** with the provided marrets (white to white “N”, black to black “L”, ground to ground “G”). Align the holes on the top and bottom of the canopy to the holes on the canopy back plate. Once aligned, screw in, top and bottom, the two screws **(2b)** provided to secure the canopy **(2a)** to the back plate **(3a)**.

4. LED Engine is built in. Push the glass **(1a)** down to the LED engine **(1b)** and thread, turning clockwise.

5. You have now completed the installation of your fixture, do enjoy.

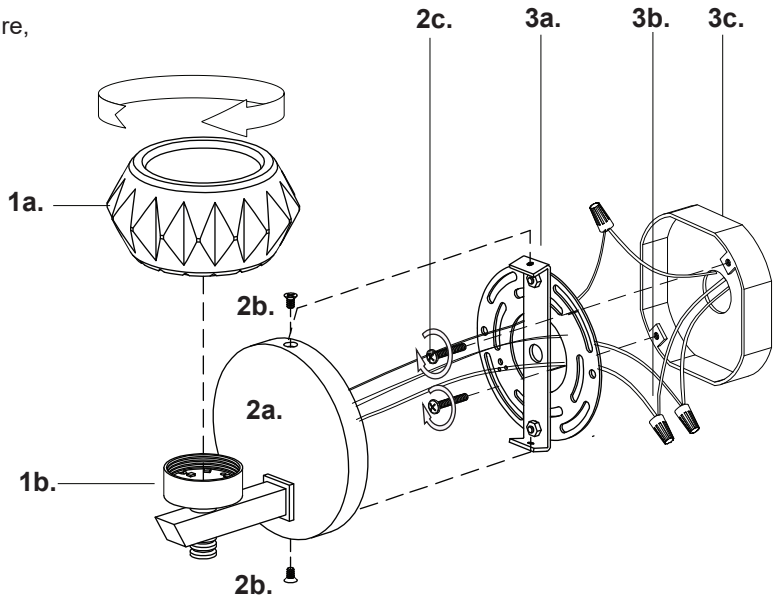

KUZCO
19054 28th Avenue Surrey, BC Canada V3Z 6M3
T: 604 538 7162 TF: 1-855 85 KUZCO F: 604 538 7196
W: kuzcolighting.com
20181127