WS2614-LED

INSTALLATION SHEET

Single LED Wall Sconce

Please Note:

• All Kuzco LED fixtures come with pre-wired LED module(s).

• Unless instructed to do so, please do not touch any part of the LED module(s) as any unnecessary contact with the module could cause permanent damage.

• For dimming, an ELV (Electronic Low Voltage) dimmer is required.

START FROM HERE

- Make sure power is completely off at the fuse box.
- Have your fixture installed by a qualified licensed electrician
- Prepare everything in clear area.
- Wear gloves at all times during this installation.
- Read instructions carefully before you start assembly.
- Keep this instruction sheet for future reference.

Technical Support: 1-855-855-8926

1. Remove the fixture from its original packaging. Remove the canopy mounting plate from within the canopy and attach it to the electrical junction box on the wall, using the two screws provided in the hardware package.

2. Attach the canopy to the mounting plate (2a), which is attached to the electrical junction box (2b) on the wall. First attach all wiring (2c) with the provided marrets (white to white “N”, black to black “L”, ground to ground “G”). Push the canopy onto the mounting plate (2a), and align the holes (above & below) on the canopy (2d) to the holes on the mounting plate. Once aligned, screw in the decorative nuts (2e) provided to secure the fixture to the wall.

3. You have now completed the installation of your fixture, please enjoy.

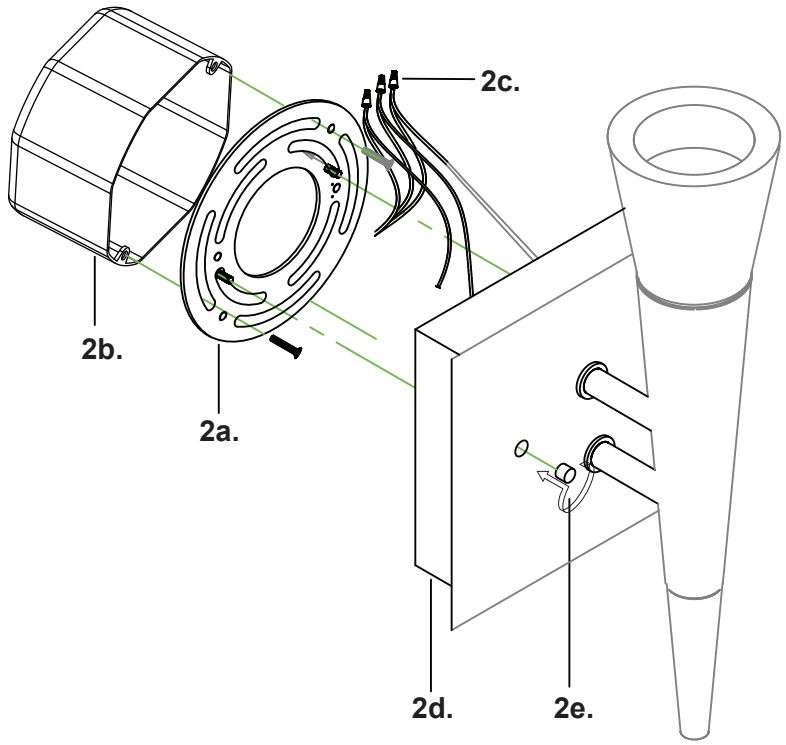

KUZCO
19054 28th Avenue Surrey, BC Canada V3Z 6M3
T: 604 538 7162 TF: 1-855 85 KUZCO F: 604 538 7196
W: kuzcolighting.com
20181127