INSTALLATION INSTRUCTIONS

Task Light

BL234608

MODERN FORMS®

CAUTION: To prevent electrical shock, ensure electricity has been turned off at the circuit breaker before beginning.

- Read all instructions before installing.
- System is intended for installation by a licensed electrician in accordance with the National Electrical Code (NEC) and local regulations.
- When handling the fixture, do not apply pressure to the LEDs. Hold the fixture by the base only.
- Retain installation instructions for future maintenance reference.

WARNING: All parts must be used as indicated in these instructions. This product is designed for use only with the supplied parts and/or accessories designated for use by Modern Forms. Substitution of parts or accessories not designated for use with this product by Modern Forms could result in personal injury or property damage, and will void the warranty. Contact an authorized dealer or the manufacturer if any parts are damaged or missing.

MAINTENANCE NOTE: Coastal conditions may cause mineral and residue build-up on the fixture. We recommend that customers in coastal areas clean all external surfaces of the fixture once every two weeks with a wet cloth.

MISE EN GARDE: Pour éviter tout choc électrique, assurez-vous que le disjoncteur soit mis hors tension avant de commencer.

- Lisez toutes les instructions avant l'installation.
- Le système doit être installé par un électricien licensié conformément au code national de l'électricité (NEC), et également aux règlements locaux.
- Lors de la manipulation du luminaire, n'appuyez pas sur les LED. Tenez-le uniquement par la base.

ATTENTION: Toutes les pièces doivent être utilisées comme indiqué dans ces instructions. Ce produit est conçu pour être utilisé seulement avec les pièces et/ou accessoires fournis pour être utilisés avec les produits Modern Forms. Remplacer des pièces ou accessoires non conçus pour ce produit Modern Forms pourrait causer des dommages corporels ou matériels et pourrait également causer l'annulation de la garantie. Veuillez contacter un revendeur autorisé ou le fabricant si des pièces manquent ou sont endommagées.

NOTE D'ENTRETIEN: Les conditions côtières peut causer une accumulation de minéraux et de résidue sur le luminaire. Nous recommendons aux clients qui resident dans les zones côtières de nettoyer toutes les surfaces externes du luminaire une fois toutes les deux semaines avec un chiffon humide.

HARDWARE

A



Wire Connector
Qty: 3pcs+1 Extra

B



Mounting Screw
Qty: 1 Extra

ModernForms. com
Phone (866) 810-6615
Fax (800) 526-2585

Headquarters, East Manufacturing Facility
44 Harbor Park Drive
Port Washington, NY 11050

South East Manufacturing Facility
1600 Distribution Ct
Lithia Springs, GA 30122

Central Manufacturing Facility
1700 South J Elmer Freeway, Ste 100
Cedar Hill, TX 75104

West Manufacturing Facility
1750 S Archibald Ave
Ontario, CA 91761

MODERN FORMS retains the right to modify the design of our products at any time as part of the company's continuous improvement program.

INSTALLATION INSTRUCTIONS
Task Light
BL234608

MODERN FORMS®

FIG. 1

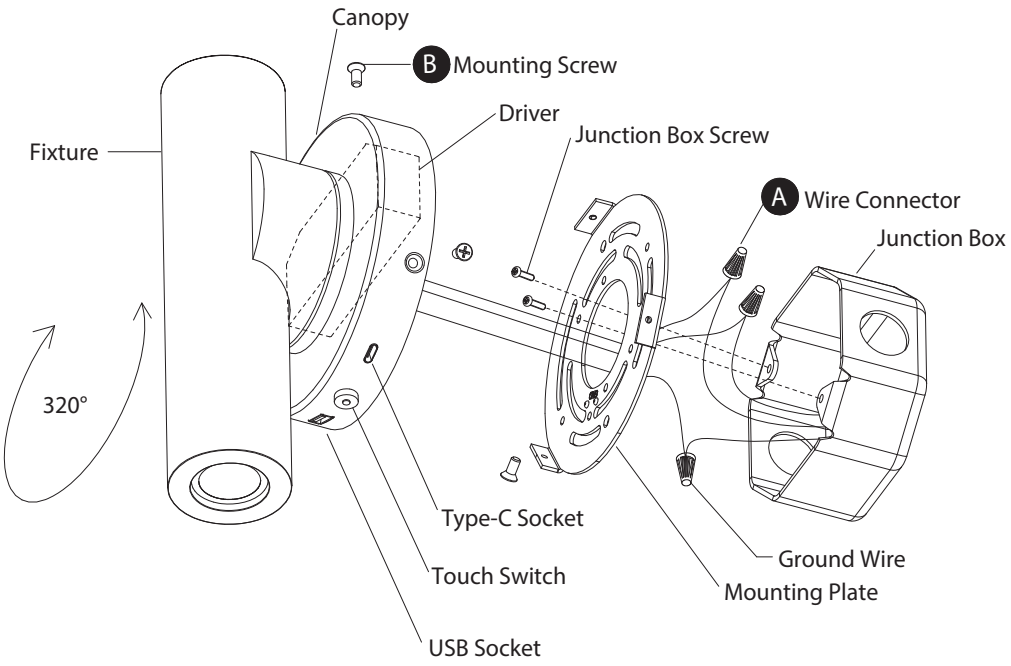

PREPARATION

1. Shut off the power at the circuit breaker and remove existing fixture, including the crossbar.
2. Carefully unpack your new fixture and lay out all the parts on a clear area. Be careful not to lose any small parts necessary for installation.

MOUNTING THE FIXTURE (Fig. 1)

3. Remove the mounting screws (B) from the fixture, take down the mounting plate.
4. Secure the mounting plate to the junction box using the screws provided with the junction box.
   Note: (i) using any other non-original-manufacturer provided junction box screw may result in safety issue;
   (ii) the side of the mounting back plate marked "GND" must face out.
5. Connect the driver input wires to the junction box wires as shown in Fig. 2 using wire connectors (A) provided. Ensure wire connectors are secure. Connect the fixture's ground wire to the ground in the junction box; this will be either a green wire or a bare copper wire. After driver is wired to house wires, tuck wires carefully inside the junction box.
6. Secure the fixture to the mounting plate using mounting screws(B).
7. Adjust fixture head for optimal lighting using the fixture.
8. Press the touch switch button to turn on and off the fixture. Press and hold to adjust the brightness.
9. The USB and Type-C parts (5V / 2A) can be used for charging no matter the light is on or off .

Mounting Plate Dimensions

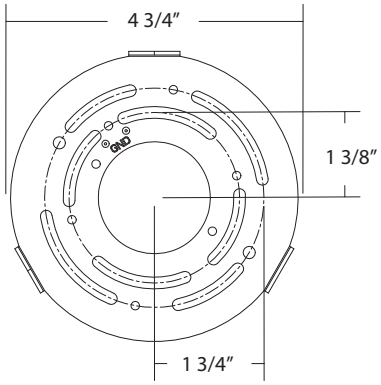

Fig. 2 Wiring



Fixture Wires	House Wires
Black or Smooth	Black (Hot)
Fixture Wires	**House Wires**
White or Ribbed	White (Neutral)
Fixture Wires	**House Wires**
Bare wire (Ground)	Green or Bare Copper (Ground)

ModernForms. com
Phone (866) 810-6615
Fax (800) 526-2585

Headquarters, East Manufacturing Facility
44 Harbor Park Drive
Port Washington, NY 11050

South East Manufacturing Facility
1600 Distribution Ct
Lithia Springs, GA 30122

Central Manufacturing Facility
1700 South J Elmer Freeway, Ste 100
Cedar Hill, TX 75104

West Manufacturing Facility
1750 S Archibald Ave
Ontario, CA 91761

MODERN FORMS retains the right to modify the design of our products at any time as part of the company's continuous improvement program.