ASSEMBLY INSTRUCTIONS

Diagram 1

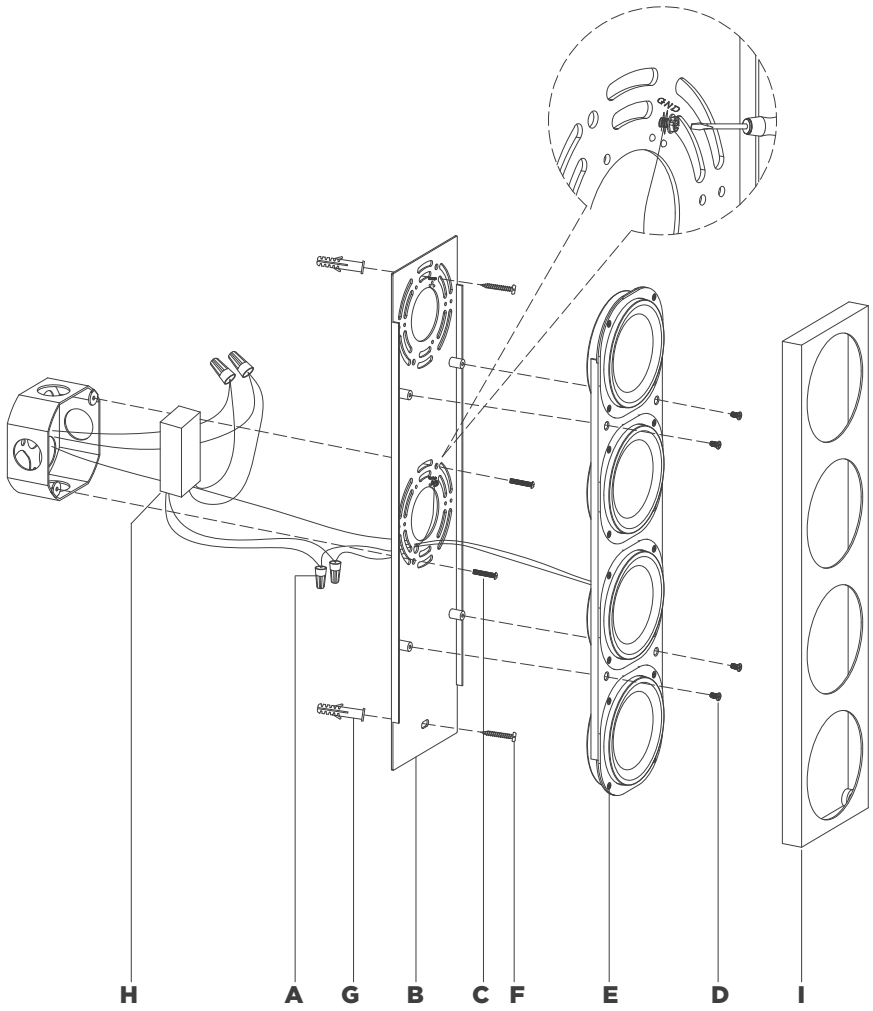

Dichotomy 18″ 4 Light Sconce

Item # KW2145

NOTICE:

This light fixture should be installed in accordance with all applicable, local installation codes, and by a person familiar with the construction and operation of it, as well as the hazards involved. Inspect item and contents carefully. If any damage or defect is found, do not install. Retain all packaging material until installation is complete and approved.

TOOLS REQUIRED (NOT INCLUDED):

Phillips Screwdriver	Slotted Screwdriver	Hammer
Pencil	Drill	

1. Carefully remove all parts from the box. Place on a clean, soft surface.
2. Remove mounting plate **(B)** from fixture **(E)** by removing screws **(D)**.
3. Using mounting plate **(B)** as a guide, line up with the junction box and mark anchor positions.
4. Using a drill bit slightly smaller than the anchor, drill holes in the marked positions. Install anchors **(G)** into the holes using a hammer.
5. Connect driver **(H)** input neutral wire (white) to the supply neutral wire (usually white) using wire nut **(A)**.
6. Connect driver **(H)** input hot wire (black) to the supply hot wire (usually black) using wire nut **(A)**.

   CAUTION: Do not reverse the hot and neutral connections.
7. Insert driver **(H)** into junction box.
8. Install mounting plate **(B)** to the junction box and secure with mounting screws **(C)**, then secure wood screws **(F)** to anchors **(G)**.
9. Wrap supply ground wire (usually green or bare copper) around the green grounding screw (see diagram 1). Tighten.

   NOTE: It is imperative that the fixture is grounded.

Intertek DAMP LED 3

ASSEMBLY INSTRUCTIONS

Diagram 1

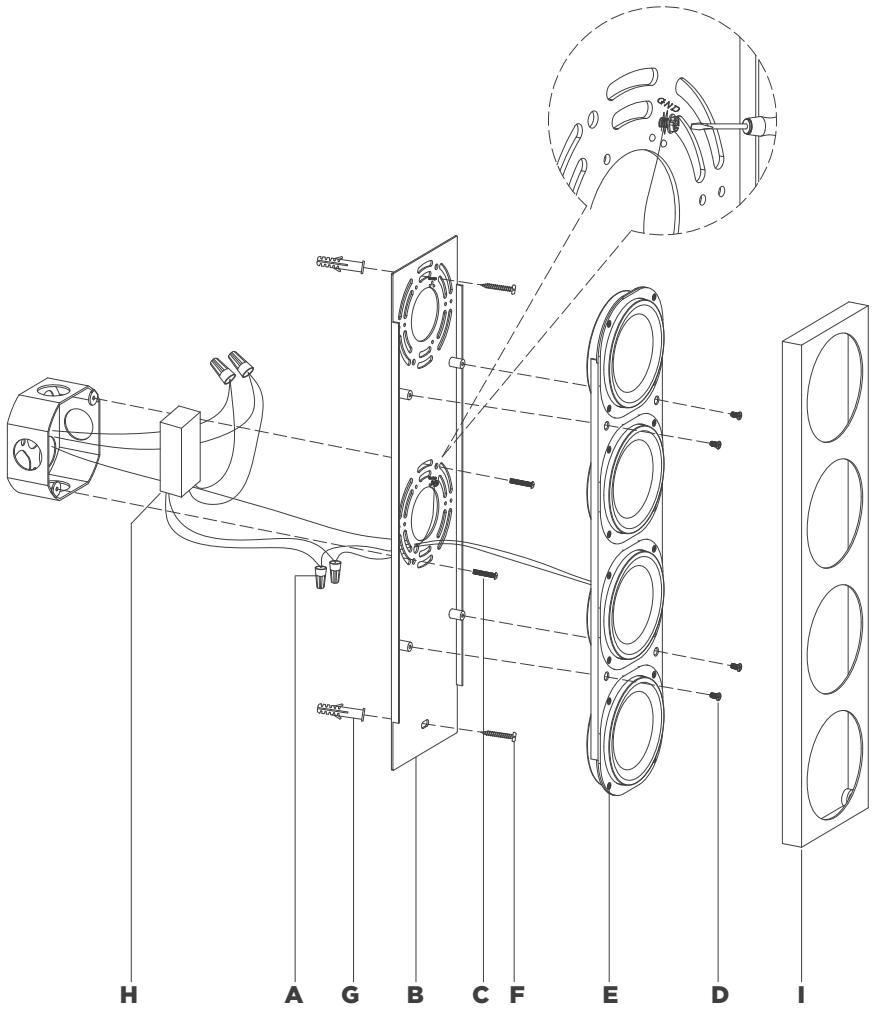

Dichotomy 18″ 4 Light Sconce

Item # KW2145

NOTICE:

This light fixture should be installed in accordance with all applicable, local installation codes, and by a person familiar with the construction and operation of it, as well as the hazards involved. Inspect item and contents carefully. If any damage or defect is found, do not install. Retain all packaging material until installation is complete and approved.

---

10. Connect fixture neutral wire (blue) to driver **(H)** output wire (blue) using wire nut **(A)**.
11. Connect fixture hot wire (red) to driver **(H)** output wire (red) using wire nut **(A)**.

    CAUTION: Do not reverse the hot and neutral connections.
12. Make sure all wire connections are tight, then carefully tuck into the junction box.
13. Install fixture **(E)** to mounting plate **(B)** and secure with screws **(D)**.
14. Attach shade **(I)** to the fixture **(E)**.

CARE INSTRUCTIONS: Clean only with a soft dry cloth or feather duster. Do not use abrasive or chemical agents.

Intertek DAMP LED 3