ASSEMBLY INSTRUCTIONS

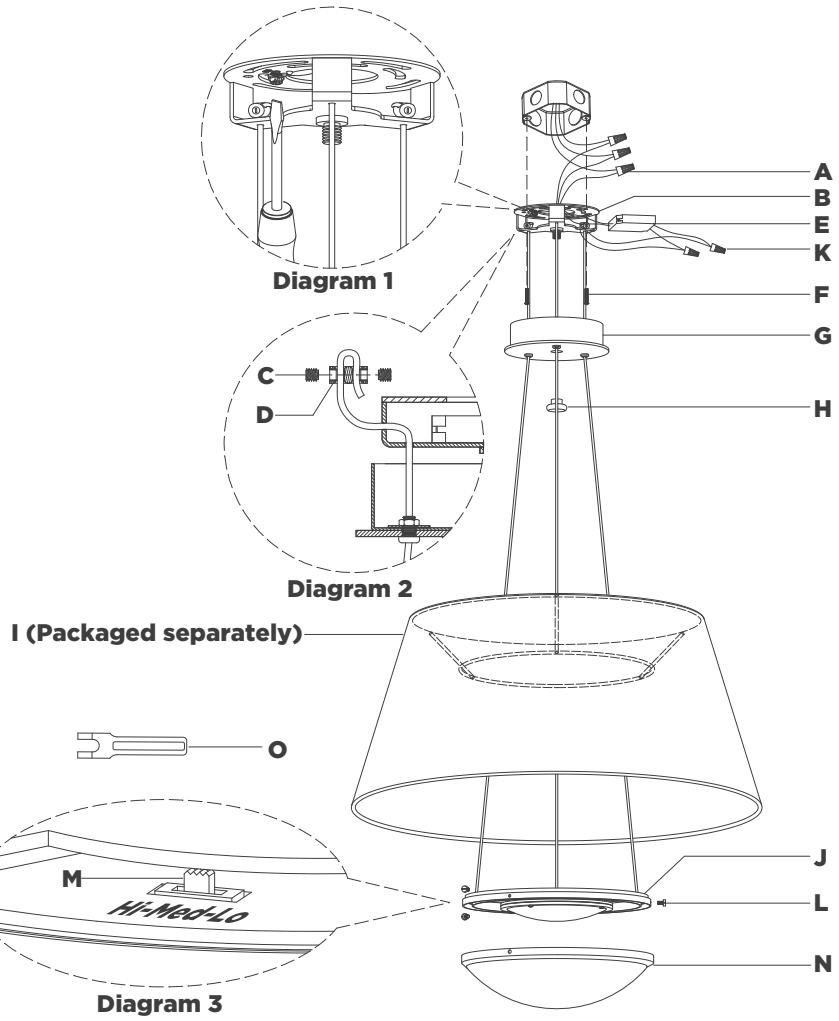

Diagram 1

Diagram 2

Diagram 3

Caufield Hanging Shade

Item # SCH5070

NOTICE:

This light fixture should be installed in accordance with all applicable, local installation codes, and by a person familiar with the construction and operation of it, as well as the hazards involved. Inspect item and contents carefully. If any damage or defect is found, do not install. Retain all packaging material until installation is complete and approved.

TOOLS REQUIRED (NOT INCLUDED):

Phillips Screwdriver	Slotted Screwdriver	Wire Strippers
Wire Cutters	Measuring Tape	

1. Carefully remove all parts from the box. Place on a clean, soft surface.
2. Remove canopy **(G)** from mounting plate **(B)** by removing threaded cap **(H)**.
3. Install mounting plate **(B)** to the junction box and secure with mounting screws **(F)**.
4. Wrap supply ground wire (usually green or bare copper) around the green grounding screw (see diagram 1). Tighten.
   NOTE: It is imperative that the fixture is grounded.
5. Gently set fixture on a flat, non-abrasive surface to adjust fixture hanging wires.
6. Install glass shade **(N)** to bottom of fixture body **(J)** and secure with screws **(L)**.
7. Feed hanging cables through shade **(I)**, then holding fixture upright, slide shade **(I)** down and rest on top of shade fixture body **(J)**.
8. Continue feed hanging cables through canopy **(G)** and mounting plate **(B)** bracket.

ASSEMBLY INSTRUCTIONS

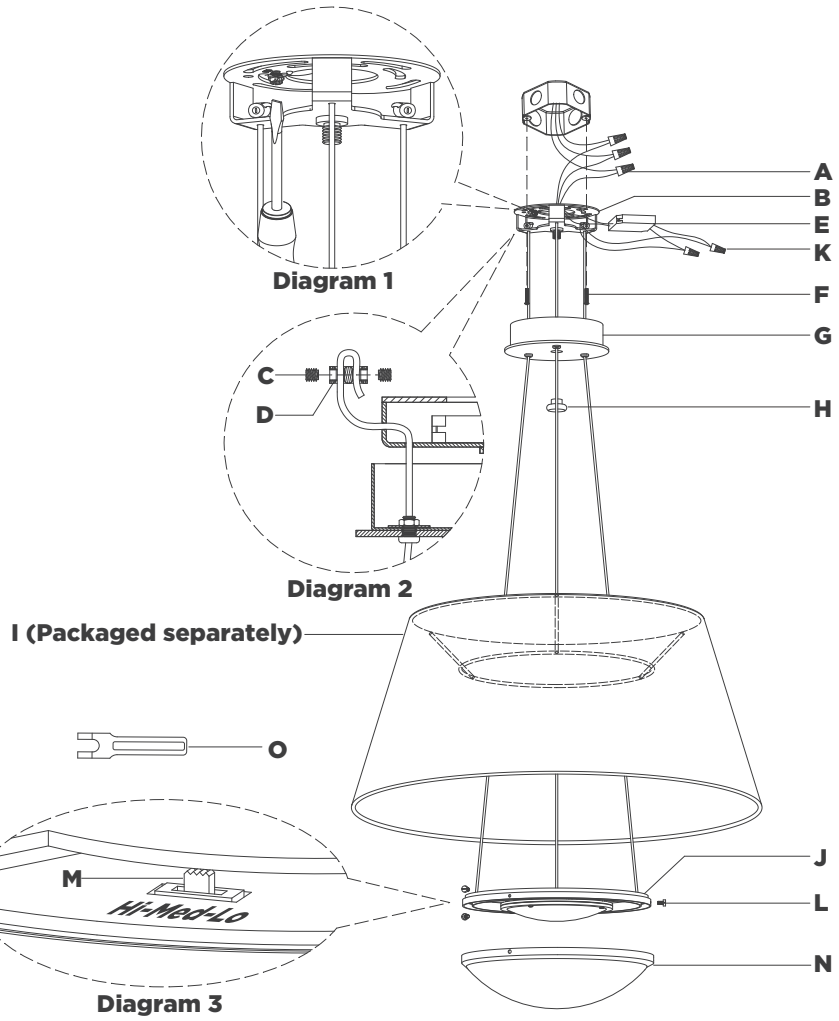

Caufield Hanging Shade

Item # SCH5070

NOTICE:

This light fixture should be installed in accordance with all applicable, local installation codes, and by a person familiar with the construction and operation of it, as well as the hazards involved. Inspect item and contents carefully. If any damage or defect is found, do not install. Retain all packaging material until installation is complete and approved.

---

9. Loosen set screw **(C)** on cable lock **(D)** and install to end of hanging cables. Insert other end of cables through the cable lock and adjust to desired length. Once complete re-secure set screw **(C)** and repeat steps with the remaining wires (see diagram 2).
10. After fixture height is achieved shorten the wires by using a pair of cutters (not included), leaving 8" of wire length to connect to the driver **(E)**.
11. Remove outer housing of wire by making a neat cut all the way around, about 1" from the end. Once cut is made, remove and discard the 1" piece of housing, exposing the electrical wires.

    NOTE: Make sure not to cut too deep into housing or electrical wires could become damaged.
12. Separate wires and strip insulation on each 5/8".
13. Connect fixture neutral wire (black) to driver **(E)** output wire (black) using wire nut **(K)**.
14. Connect fixture hot wire (red) to driver **(E)** output wire (red) using wire nut **(K)**.

    CAUTION: Do not reverse the hot and neutral connections.
15. Connect driver **(E)** input neutral wire (white) to the supply neutral wire (usually white) using wire nut **(A)**.
16. Connect driver **(E)** input hot wire (black) to the supply hot wire (usually black) using wire nut **(A)**.

    CAUTION: Do not reverse the hot and neutral connections.

ASSEMBLY INSTRUCTIONS

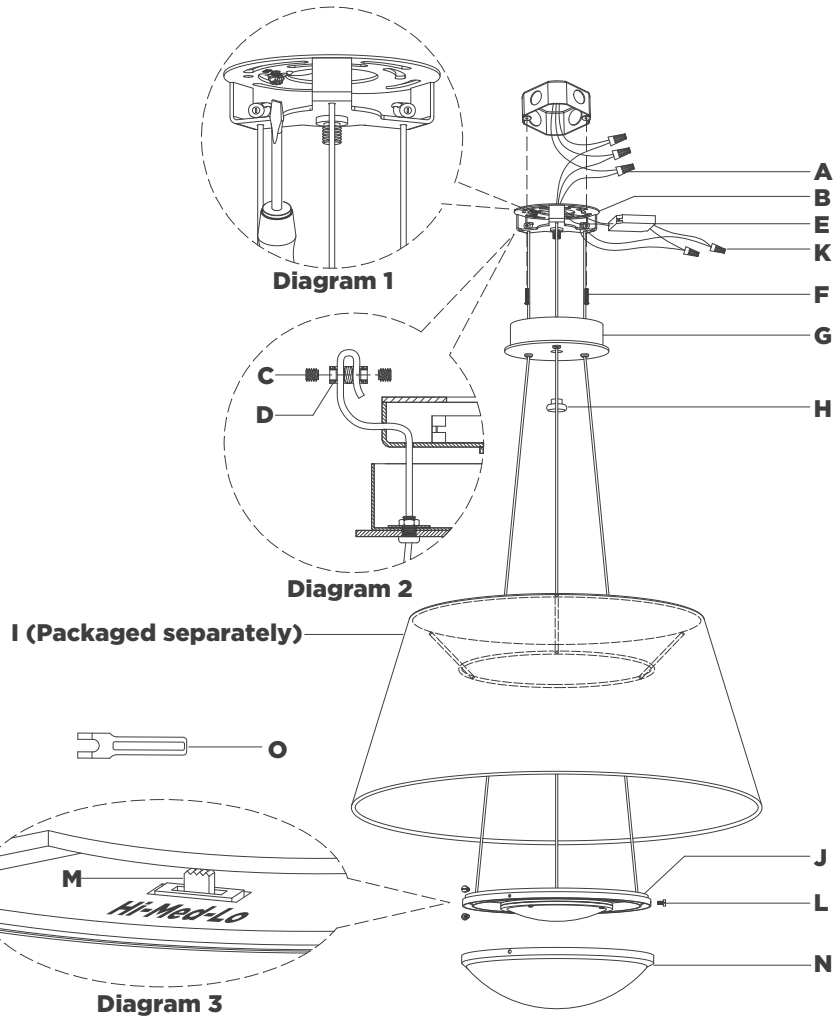

Caufield Hanging Shade

Item # SCH5070

NOTICE:

This light fixture should be installed in accordance with all applicable, local installation codes, and by a person familiar with the construction and operation of it, as well as the hazards involved. Inspect item and contents carefully. If any damage or defect is found, do not install. Retain all packaging material until installation is complete and approved.

---

17. Make sure all wire connections are tight, then carefully tuck into the junction box.
18. Insert driver **(E)** into the center of mounting plate **(B)** bracket.
19. Install canopy **(G)** to mounting plate **(B)** and secure with threaded cap **(H)**.
20. Restore power and test fixture.

LED TOGGLE SWITCH OPERATION:

LED device is pre-set to Low setting. For optimal light distribution, adjust toggle switch **(M)** to Medium or High for larger shades using provided tool **(O)**.

CARE INSTRUCTIONS: Clean only with a soft dry cloth or feather duster. Do not use abrasive or chemical agents.