ASSEMBLY INSTRUCTIONS

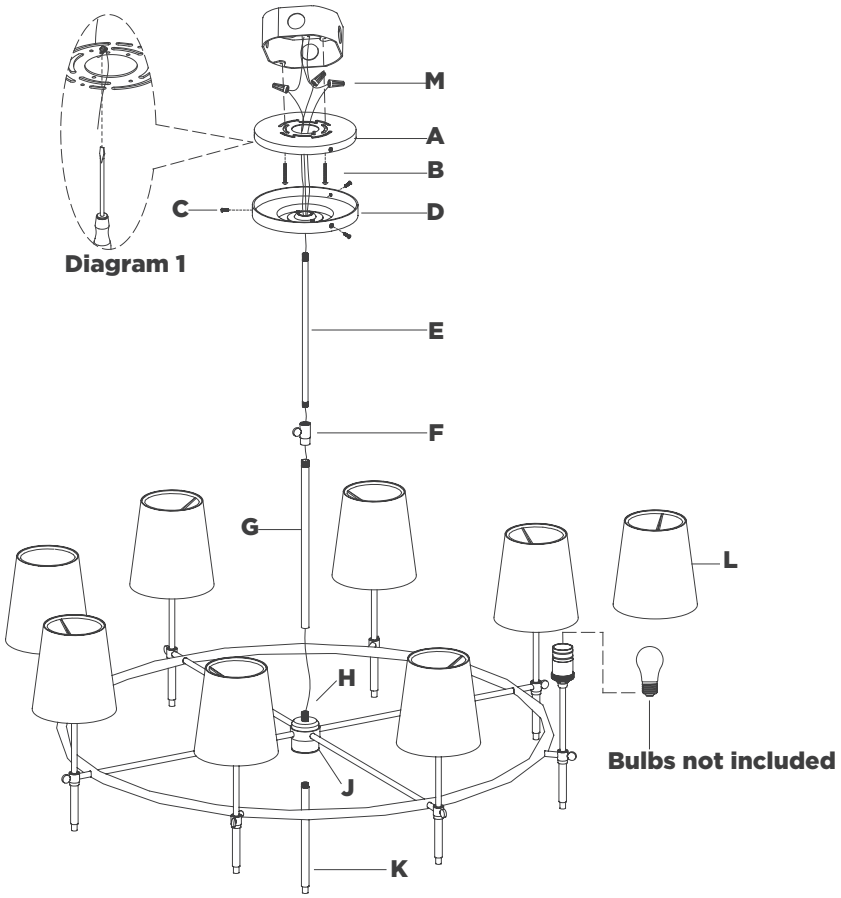

Diagram 1

Bryant Large Ring Chandelier

Item # TOB5024

NOTICE:

This light fixture should be installed in accordance with all applicable, local installation codes, and by a person familiar with the construction and operation of it, as well as the hazards involved. Inspect item and contents carefully. If any damage or defect is found, do not install. Retain all packaging material until installation is complete and approved.

TOOLS REQUIRED (NOT INCLUDED):

Phillips Screwdriver Slotted Screwdriver Wire Strippers

Wire Cutters

---

1. Carefully remove all parts from the box. Place on a clean, soft surface.
2. Remove mounting plate **(A)** from canopy **(D)** by removing screws **(C)**.
3. Install mounting plate **(A)** to the junction box and secure with mounting screws **(B)**.
4. Feed fixture wires through rod **(G)**, then thread rod **(G)** to fixture body **(H)**.
5. Feed fixture wires through coupling **(F)**, then connect to rod **(G)**. Repeat for rod **(E)**, and connect rod **(E)** to coupling **(F)**.
6. Continue feeding fixture wires through canopy **(D)**, then thread to rod **(E)**.
7. Cut excess wires, being sure to leave enough to reach the junction box. Separate wires and strip insulation on each 5/8″.
8. Wrap fixture ground wire (bare copper) around the green grounding screw (see diagram 1). Tighten. Continue fixture ground wire and connect to supply ground wire (usually green or bare copper) using wire nut **(M)**.
   NOTE: It is imperative that the fixture is grounded.

ASSEMBLY INSTRUCTIONS

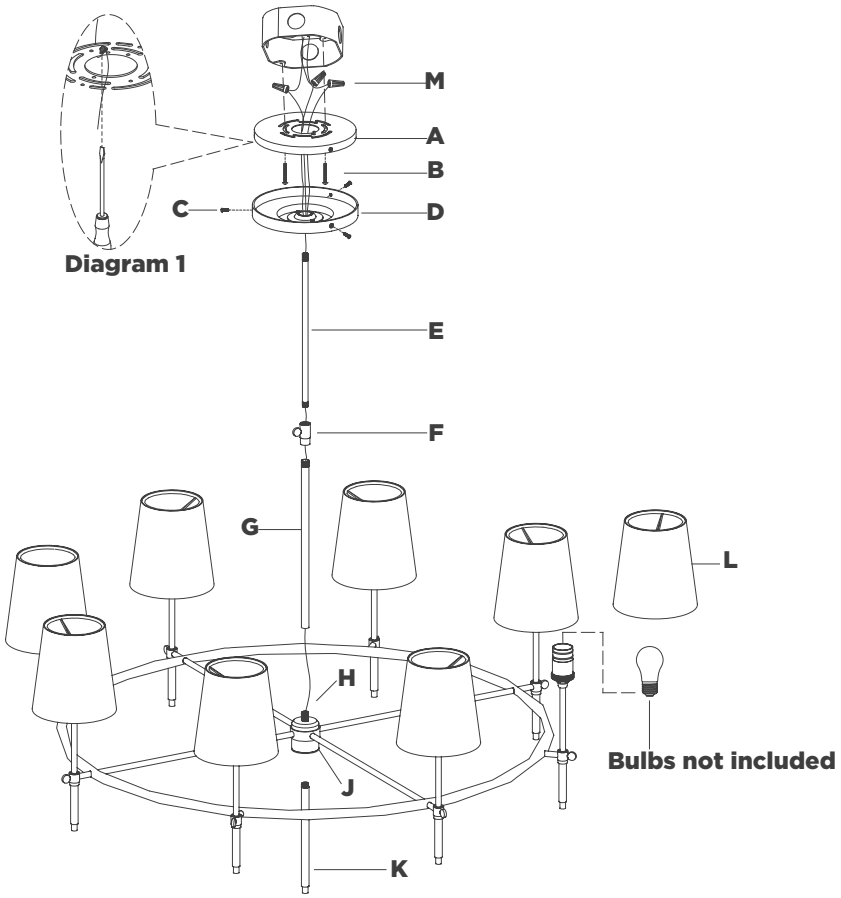

Diagram 1

Bryant Large Ring Chandelier

Item # TOB5024

NOTICE:

This light fixture should be installed in accordance with all applicable, local installation codes, and by a person familiar with the construction and operation of it, as well as the hazards involved. Inspect item and contents carefully. If any damage or defect is found, do not install. Retain all packaging material until installation is complete and approved.

---

9. Connect fixture neutral wire (white) to the supply neutral wire (usually white) using wire nut **(M)**.
10. Connect fixture hot wire (black) to the supply hot wire (usually black) using wire nut **(M)**.
    CAUTION: Do not reverse the hot and neutral connections.
11. Make sure all wire connections are tight, then carefully tuck into the junction box.
12. Install canopy **(D)** to mounting plate **(A)** and secure with screws **(C)**.
13. Install light bulbs into the sockets.
14. Thread rod **(K)** to bottom of fixture body **(J)**.
15. Clip shades **(L)** onto light bulbs.
    NOTE: If shade has additional packaging, carefully cut from interior of shade to avoid damage.

CARE INSTRUCTIONS: Clean only with a soft dry cloth or feather duster. Do not use abrasive or chemical agents.