TEAR SHEET



Lyndsie Small Cordless Sconce

Item # AL 2001AI-L-CL

Designer: Amber Lewis

Height: 10.75"

Width: 6"

Extension: 10"

Backplate: 4.25" Round

Finishes: AI, HAB, PN

Shade Treatments: L, NTW, SP

Shade Details: 4" x 6" x 6.5"

Lightsource: Rechargeable LED w/ Touch Dimmer

Wattage: 1.7w (60 - 250lm)

Weight: 2 Pounds

Note: Remote Compatible Rechargeable LED Lightsource Included | Charging Cable Included | Remote Control Sold Separately

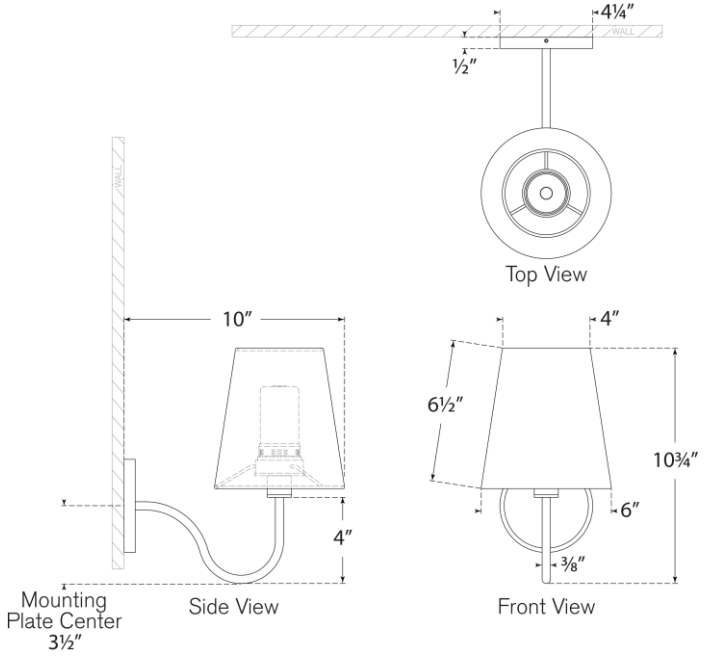

VISUAL COMFORT & CO.

DAMP LED