TEAR SHEET

# Lyndsie 11" Double Sconce

Item # AL 2002AI-L

Designer: Amber Lewis



Height: 10.75"
Width: 16"
Extension: 9.5"
Backplate: 4.25" Round
Finishes: AI, HAB, PN
Shade Treatments: L, NTW, SP
Shade Details: 4" x 6" x 6.5"
Socket: 2 - E12 Candelabra
Wattage: 2 - 6.5 LED B11
Weight: 4 Pounds
Note: 120V Configuration Only

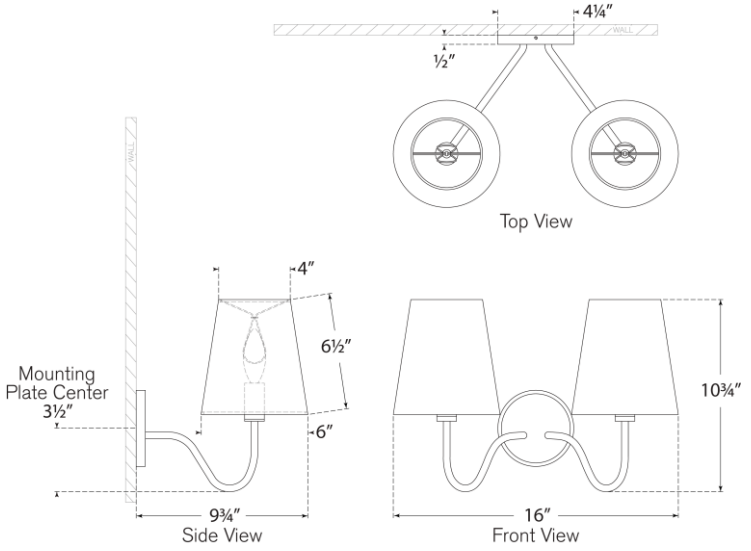


VISUAL COMFORT & CO.

DAMP LED 4