TEAR SHEET

Malia 14" Arched Wall Light

Item # AL 2004BZ-BZ

Designer: Amber Lewis



Height: 13.75"
Width: 8"
Extension: 14"
Backplate: 4.25" Round
Finishes: BZ, HAB, PN
Shade Treatments: BZ, HAB, PN, SP
Socket: E12 Candelabra
Wattage: 6.5 LED B11
Weight: 2 Pounds
Note: 120V Configuration Only

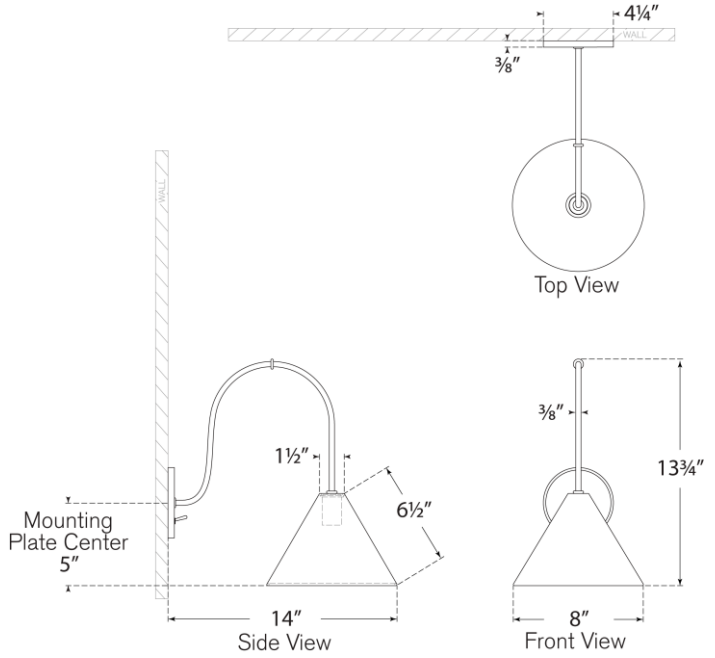

VISUAL COMFORT & CO.