TEAR SHEET



Matias 24" Carved Wood Backlit Mirror

Item # AL 2075GLW

Designer: Amber Lewis

Height: 36"

Width: 24"

Extension: 2.25"

Backplate: 18" x 27" Rectangle

Finishes: GLW

Lightsource: Dedicated LED

Wattage: 30w (4200lm)

Weight: 17 Pounds

Note: 120V Configuration Only | Color Temerature Selectable: 27K, 3
or 35K

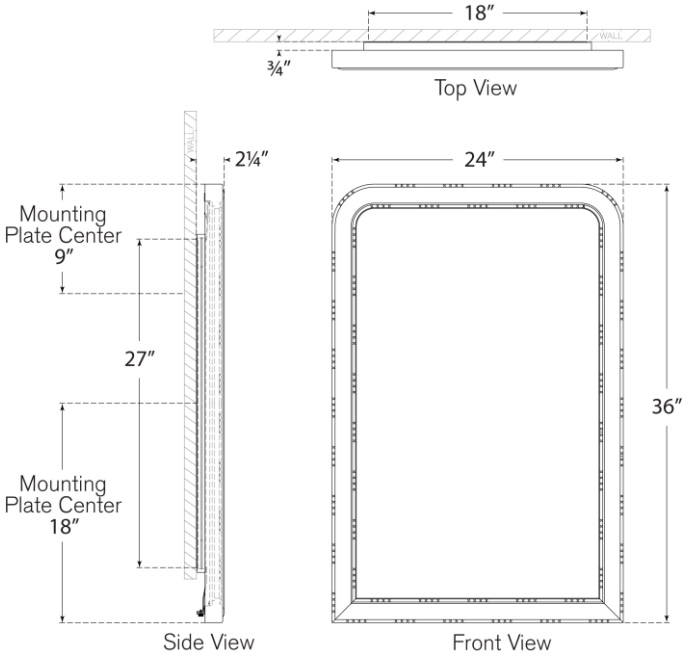

VISUAL COMFORT & CO.

DAMP LED 4