TEAR SHEET

Dume 24" Arched Table Lamp

Item # AL 3060HAB-SP

Designer: Amber Lewis



Height: 23.5"
Width: 9.5"
Extension: 17.5"
Base: 6" Round
Finishes: AI, HAB
Shade Treatments: L, NAB, SP
Shade Details: 4.5" x 9.5" x 7.5"
Socket: E26 w/ Pull Chain
Wattage: 15 LED A19
Weight: 6 Pounds
Note: 120V Configuration Only

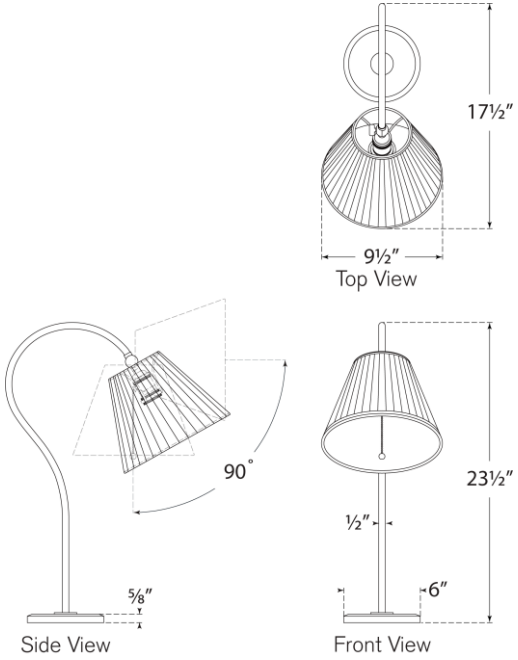

VISUAL COMFORT & CO.