TEAR SHEET

Ruby 23" Table Lamp

Item # AL 3604NTC-L



Designer: Amber Lewis

Height: 22.75"
Width: 16"
Base: 9.75" Square
Finishes: NTC
Shade Treatments: L
Shade Details: 14" x 16" x 11.25" Square
Socket: E26 Dimmer
Wattage: 15 LED A19
Weight: 37 Pounds
Note: 120V Configuration Only

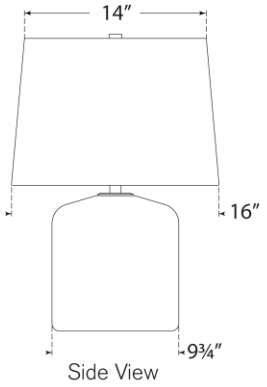

Side View

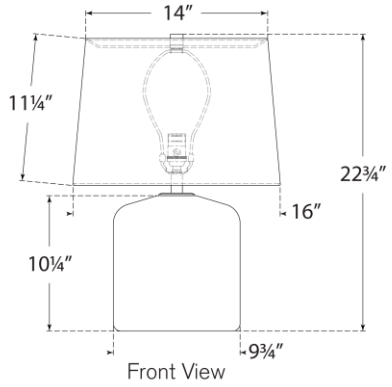

Front View

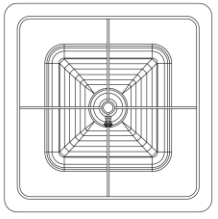
Top View

VISUAL COMFORT & CO.