TEAR SHEET



Brewer 25" Table Lamp

Item # AL 3617NTC-L

Designer: Amber Lewis

Height: 25"
Width: 19.5"
Base: 6.75" Round
Finishes: NTC
Shade Treatments: L
Shade Details: 14" x 19.5" x 12.75"
Socket: E26 Dimmer
Wattage: 15 LED A19
Weight: 32 Pounds
Note: 120V Configuration Only

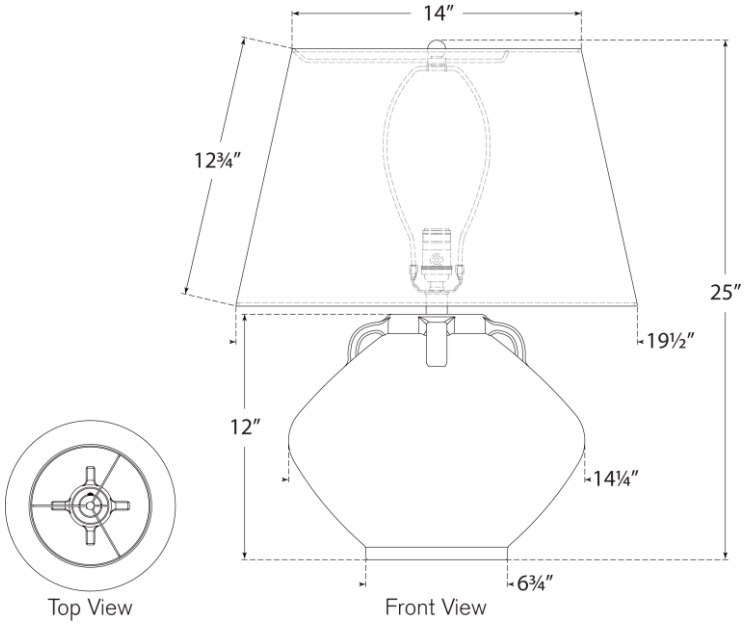

VISUAL COMFORT & CO.