TEAR SHEET



Bradley 18" Flush Mount

Item # AL 4101BZ-SP

Designer: Amber Lewis

Height: 8.75"
Width: 18"
Canopy: 7.75" Round
Finishes: BZ, HAB, PN
Shade Treatments: SP
Shade Details: 7.75" x 18" x 9.25" Scallop
Socket: E26 Keyless
Wattage: 15 LED A19
Weight: 4 Pounds
Note: 120V Configuration Only

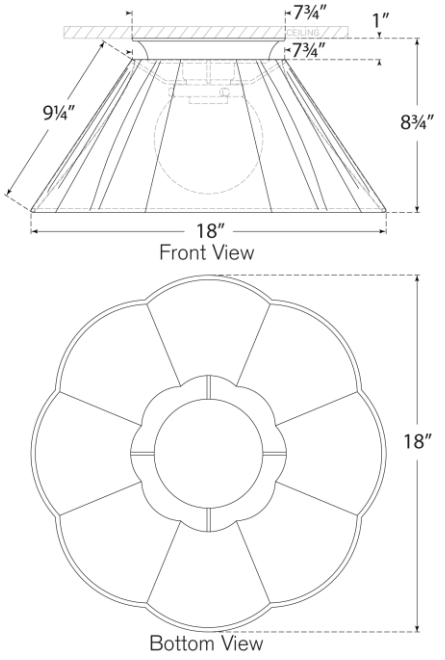

VISUAL COMFORT & CO.