TEAR SHEET



Armise 14" Sconce

Item # AMB 2000MTP-ALB

Designer: Anne-Marie Barton

Height: 14"

Width: 7"

Extension: 7.75"

Backplate: 4.5" x 11" Rectangle

Finishes: MTB, MTC, MTP

Trim Options: ALB, NF

Lightsource: Dedicated LED

Wattage: 12w (1600lm)

Weight: 22 Pounds

Note: Alabaster is a Natural Stone | Variations in Color and Texture ar
Expected

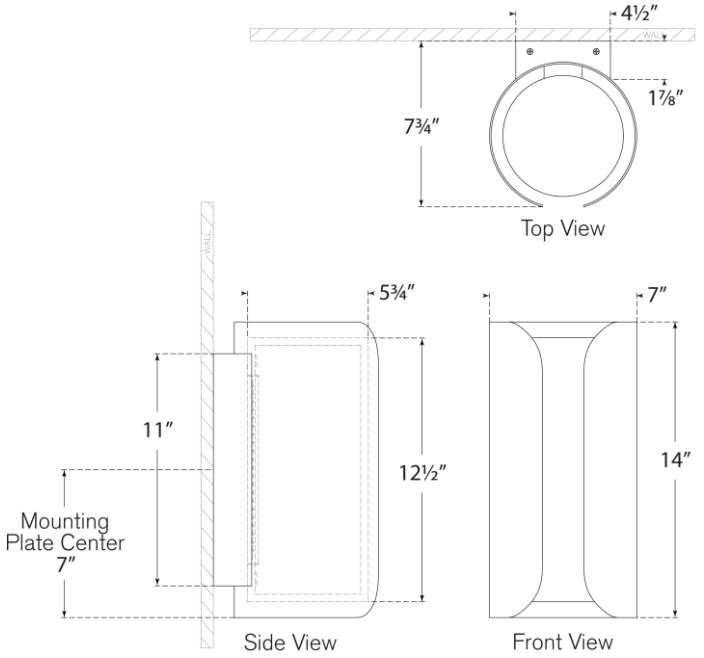

VISUAL COMFORT & CO.

DAMP LED 4