TEAR SHEET



Remi 18" Sconce

Item # AMB 2020MTP/WW

Designer: Anne-Marie Barton

Height: 18"
Width: 6.5"
Extension: 4.25"
Backplate: 5" x 10" Rectangle
Finishes: MTB/WW, MTC/WW, MTP/WW
Lightsource: Dedicated LED
Wattage: 5w (700lm)
Weight: 10 Pounds
Note: 120V Configuration Only

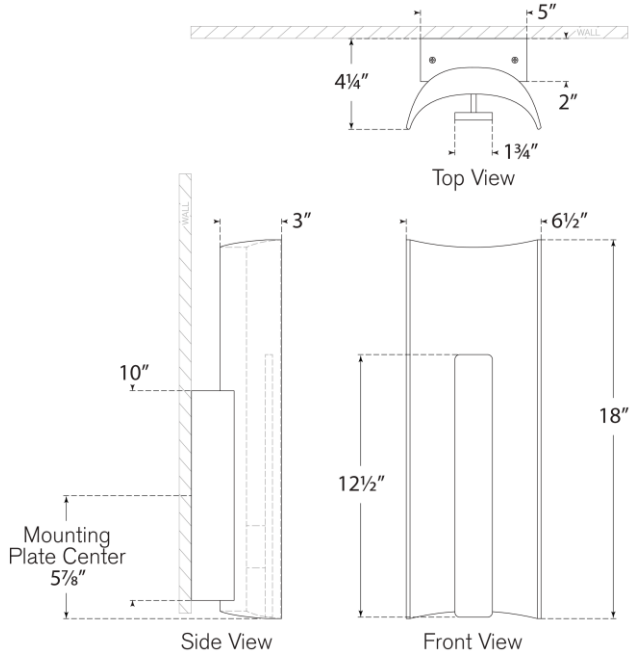

VISUAL COMFORT & CO.

DAMP LED 4