TEAR SHEET



Austera 20" Sconce

Item # AMB 2040MTP-ALB

Designer: Anne-Marie Barton

Height: 20"

Width: 8"

Extension: 3.25"

Backplate: 7.75" x 20" Rectangle

Finishes: MTB, MTC, MTP

Trim Options: ALB

Lightsource: Dedicated LED

Wattage: 12w (1600lm)

Weight: 22 Pounds

Note: Alabaster is a Natural Stone | Variations in Color and Texture ar
Expected

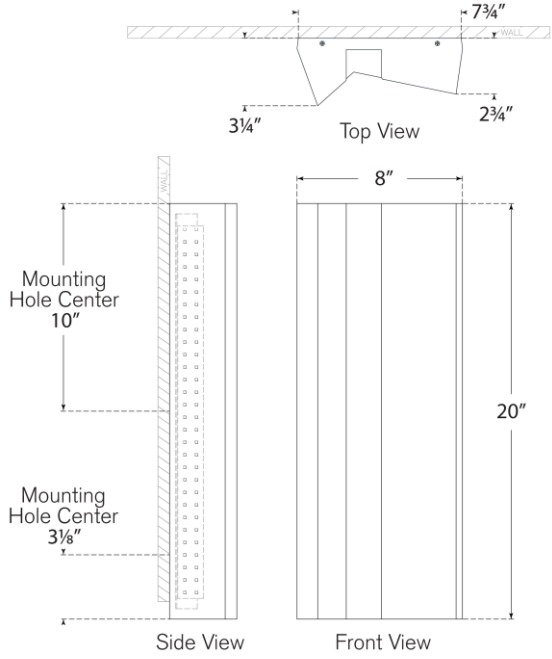

VISUAL COMFORT & CO.

DAMP LED 4