TEAR SHEET



Terra-Forma 23" Left Table Lamp

Item # AMB 3081PW-B

Designer: Anne-Marie Barton

Height: 22.75"
Width: 11"
Extension: 20"
Base: 7.75" x 16" Rectangle
Finishes: MBR, MPT, PW
Shade Treatments: B
Shade Details: 20" x 20" x 10" Rectangle
Socket: E12 Candelabra, E26 Keyless w/ Dimmer on Body
Wattage: 6.5 LED B11, 8 LED T10
Weight: 17 Pounds
Note: 120V Configuration Only



Top View

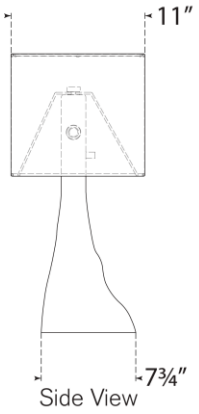

Side View

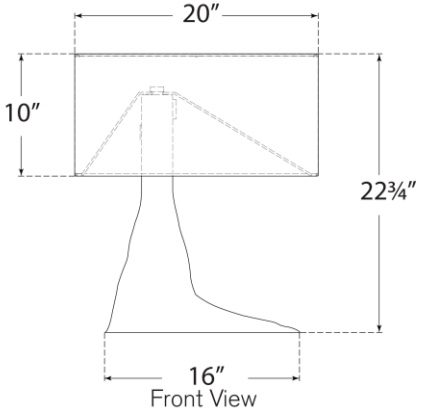

Front View

VISUAL COMFORT & CO.