TEAR SHEET



Remi 60" Linear Pendant

Item # AMB 5020MTP/WW

Designer: Anne-Marie Barton

O/A Height: 48"

Fixture Height: 3.5"

Min. Custom Height: 11"

Width: 12" x 59.75"

Canopy: 5" x 42" Rectangle

Finishes: MTB/WW, MTC/WW, MTP/WW

Lightsource: Dedicated LED

Wattage: 50w (7000lm)

Weight: 50 Pounds

Note: 120V Configuration Only | Slope Ceiling Compatible Only when Mounted Perpendicular to Slope | Custom Height Available

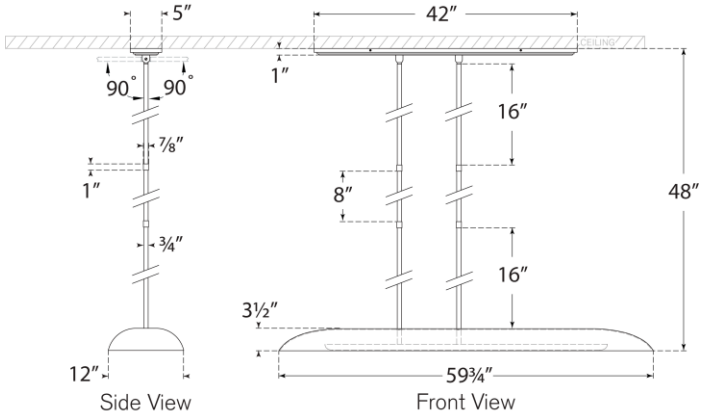

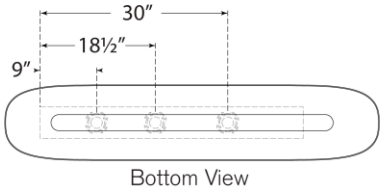

VISUAL COMFORT & CO.

DAMP LED 4