TEAR SHEET



Pascal 21" Sconce

Item # ARN 2415BZ-ALB

Designer: AERIN

Height: 20.5"

Width: 8"

Extension: 4"

Finishes: BZ, HAB, PN

Shade Treatments: ALB

Socket: 3 - E12 Candelabra

Wattage: 3 - 6.5 LED B11

Weight: 21 Pounds

Note: 120V Configuration Only | Alabaster is a Natural Stone | Variations in Color and Texture are Expected

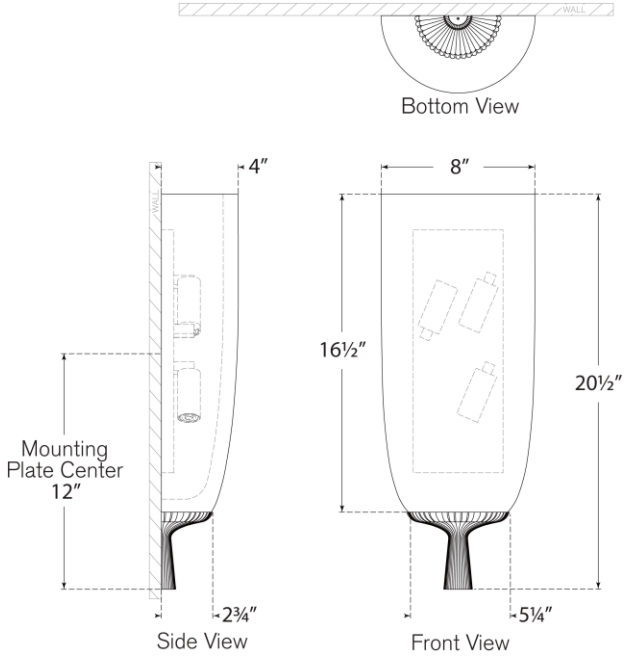

VISUAL COMFORT & CO.