TEAR SHEET



Gaios 13" Cordless Accent Lamp

Item # ARN 3118PHW-L-CL

Designer: AERIN

Height: 12.5"

Width: 9"

Base: 2.75" Round

Finishes: CIV, GGY, PHW

Shade Treatments: L

Shade Details: 9" x 9" x 5.5"

Lightsource: Rechargeable LED w/ Touch Dimmer

Wattage: 1.7w (60 - 250lm)

Weight: 5 Pounds

Note: Rechargeable LED Lightsource and Charging Cable Included | Reactive Ceramic Glazes Will Vary in Color and Texture

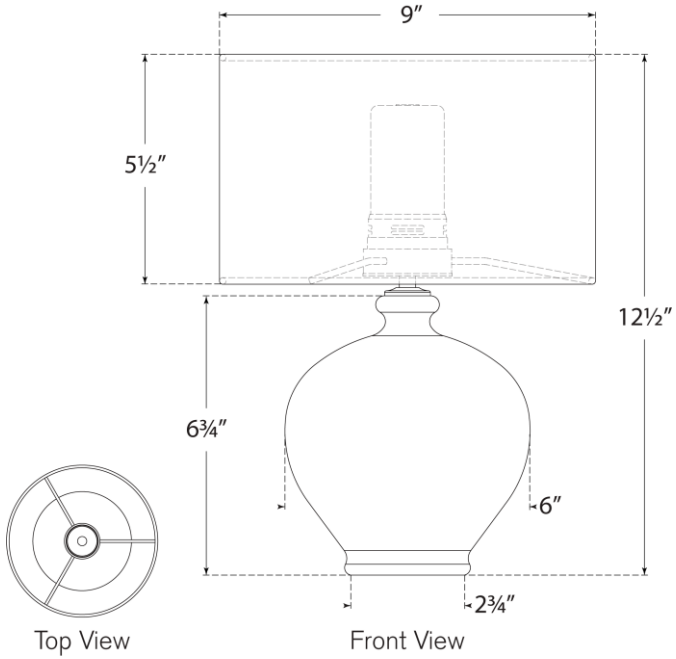

VISUAL COMFORT & CO.

DAMP LED