TEAR SHEET



Mathis 29" Table Lamp

Item # ARN 3365CHT-L

Designer: AERIN

Height: 29.25"

Width: 19"

Base: 5.25" Round

Finishes: CHT, MRL

Shade Treatments: L

Shade Details: 12.5" x 19" x 13"

Socket: E26 Dimmer

Wattage: 15 LED A19

Weight: 13 Pounds

Note: 120V Configuration Only | Reactive Ceramic Glazes Will Vary ir Color and Texture

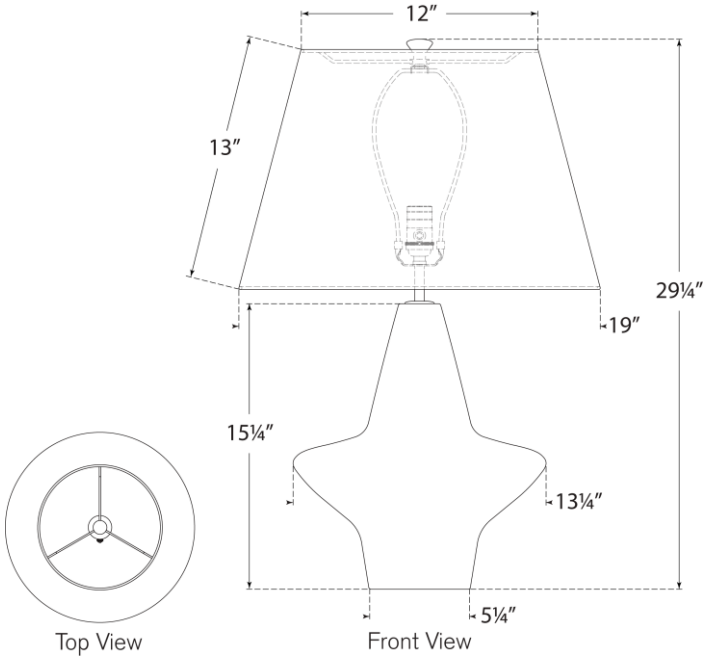

VISUAL COMFORT & CO.