TEAR SHEET

Asalea Monopoint Flush Mount

Item # ARN 4501PN-CG

Designer: AERIN

Height: 10.25"
Width: 4.5"
Canopy: 4.5" Round
Finishes: PN
Glass Options: CG
Socket: E26 Keyless
Wattage: 8 LED T9
Weight: 6 Pounds



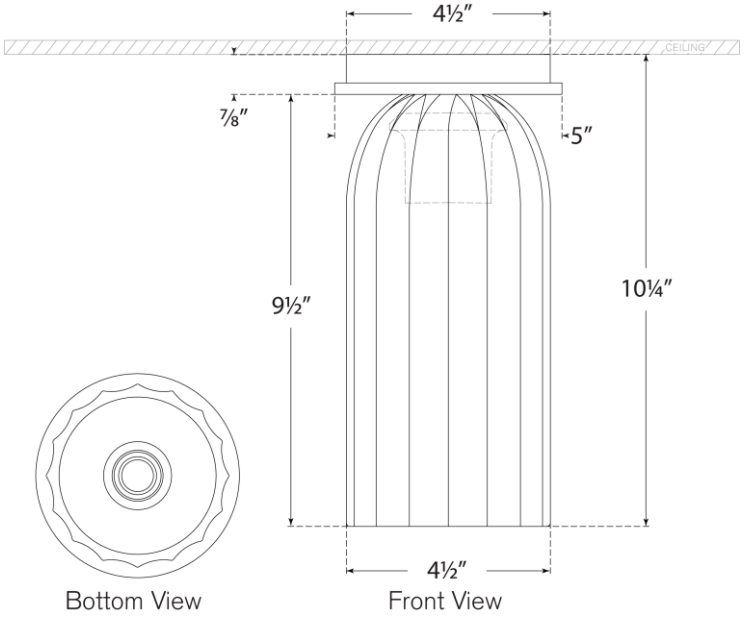

Bottom View

Front View

VISUAL COMFORT & CO.