TEAR SHEET

Ayers 31" Sculptural Chandelier

Item # ARN 5040BZ/PW

Designer: AERIN

Height: 21"
Width: 30.5"
Canopy: 5" Round
Finishes: BZ/PW, HAB/PW
Socket: 6 - E12 Candelabra
Wattage: 6 - 6.5 LED B11
Weight: 46 Pounds
Note: 120V Configuration Only



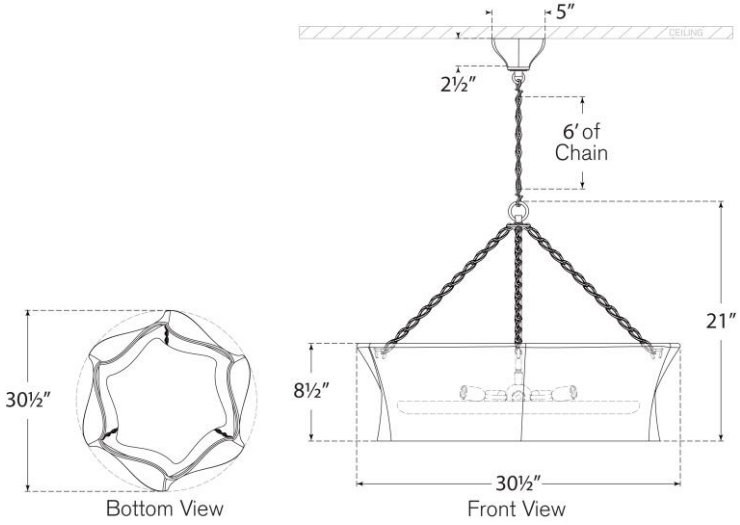

VISUAL COMFORT & CO.