TEAR SHEET



Windchime 25" Tubular Sconce

Item # BBL 2240SB-EG

Designer: Barbara Barry

Height: 25"
Width: 2.75"
Extension: 3.75"
Backplate: 2.75" x 4.5" Rectangle
Finishes: BZ, PN, SB
Glass Options: EG
Lightsource: Dedicated LED
Wattage: 10w (1400lm)
Weight: 4 Pounds
Note: 120V Configuration Only | Requires Smaller Outlet Box

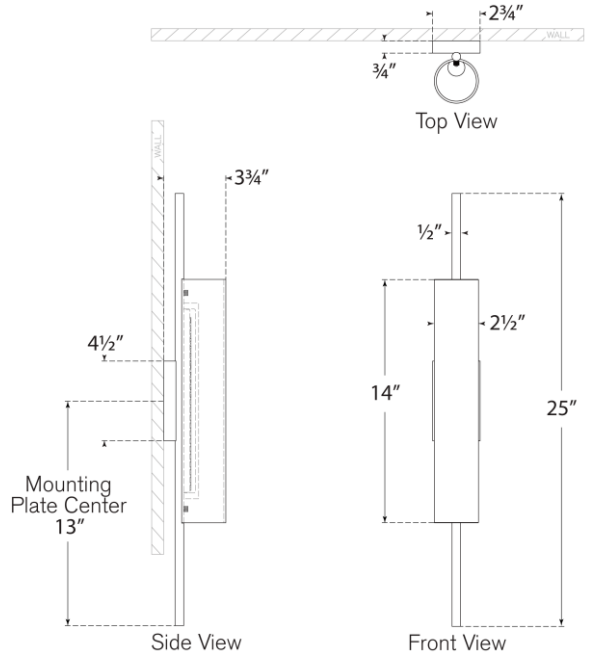

VISUAL COMFORT & CO.

DAMP LED 4