TEAR SHEET



Melanie 12" Cordless Accent Lamp

Item # BBL 3617CIV-L-CL

Designer: Barbara Barry

Height: 12"

Width: 8.5"

Base: 4" Decorative

Finishes: CIV, CMN

Shade Treatments: I

Shade Details: 7.5" x 8.5" x 5.75"

Lightsource: Rechargeable LED w/ Touch Dimmer

Wattage: 1.7w (60 - 250lm)

Weight: 4 Pounds

Note: Rechargeable LED Lightsource and Charging Cable Included | Reactive Ceramic Glazes Will Vary in Color and Texture

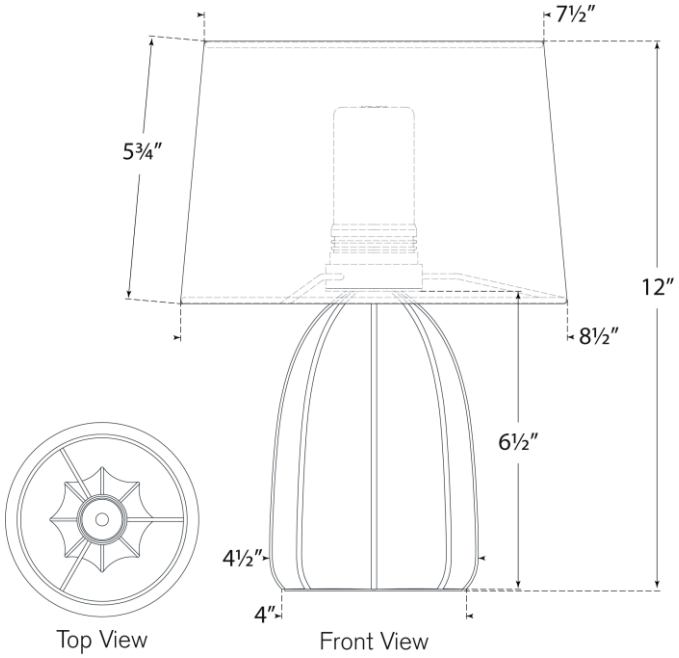

VISUAL COMFORT & CO.

DAMP LED