TEAR SHEET

Nimbus Tall Pendant

Item # BBL 5136BLK

Designer: Barbara Barry

Height: 16"
Width: 6.5"
Canopy: 4.5" Round
Finishes: BLK, WHT
Socket: E26 Keyless
Wattage: 15 LED A19
Weight: 4 Pounds



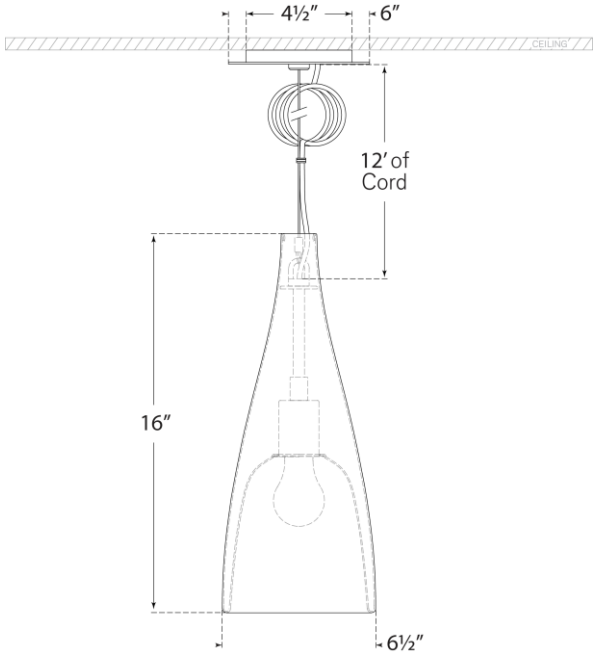

VISUAL COMFORT & CO.