TEAR SHEET

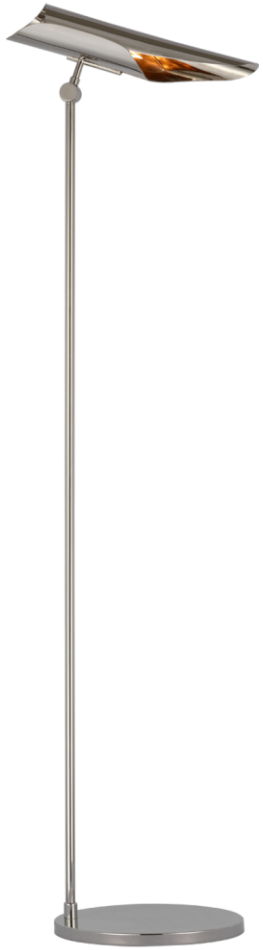

Flore Floor Lamp

Item # CD 1020PN

Designer: Champalimaud

Height: 48.5" - 49.25"
Width: 10"
Extension: 12.25" - 13.5"
Base: 10" Round
Finishes: PN, SB/RB
Socket: E12 On/Off Toggle
Wattage: 6.5 LED B11
Weight: 11 Pounds



Back View

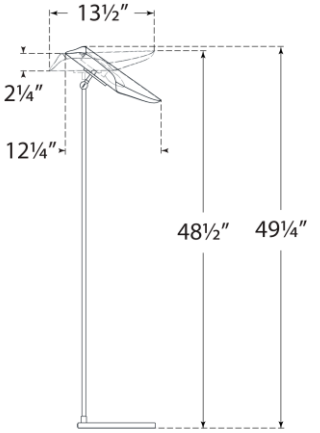

Side View


Top View

VISUAL COMFORT & CO.