TEAR SHEET

Flore Single Wall Light

Item # CD 2002GM

Designer: Champalimaud

Height: 10" - 12.75"
Width: 5.25"
Extension: 6.5" - 10"
Backplate: 4.75" Round
Finishes: GM, PN, SB/RB
Socket: E12 On/Off Toggle
Wattage: 6.5 LED B11
Weight: 3 Pounds



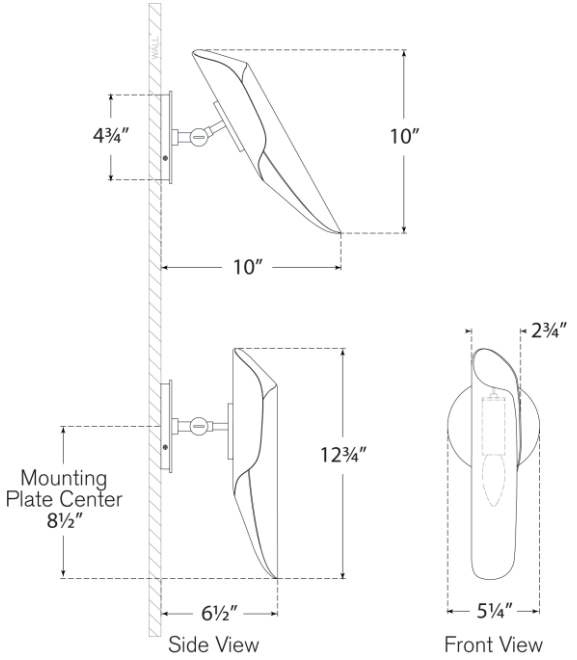

VISUAL COMFORT & CO.