TEAR SHEET

Marisol 28" Bath Bar

Item # CD 2015GM-WG

Designer: Champalimaud

Height: 8.5"
Width: 28"
Extension: 3.5"
Backplate: 4.25" x 28" Decorative
Finishes: GM, PN, SB
Glass Options: WG
Lightsource: Dedicated LED
Wattage: 18w (1500lm)
Weight: 9 Pounds

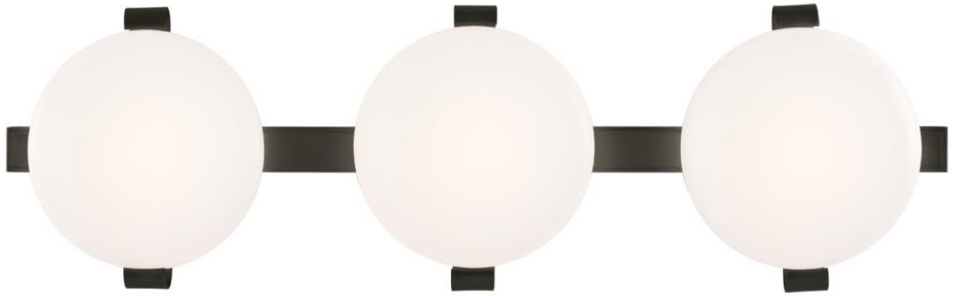

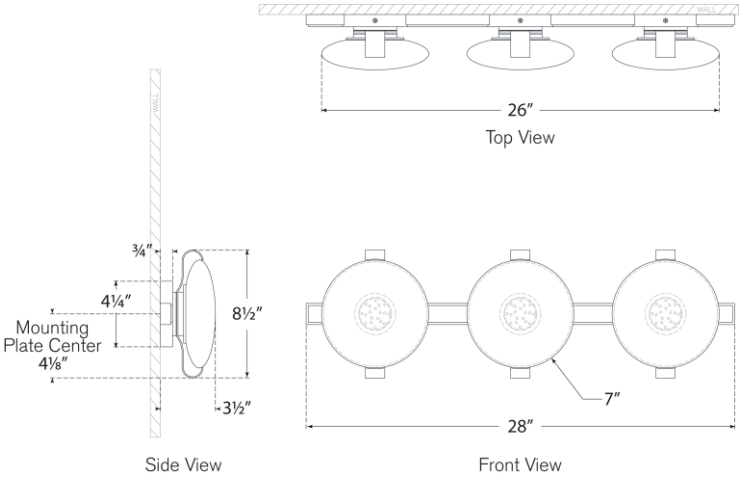

VISUAL COMFORT & CO.

DAMP LED 4